KIB + KID2

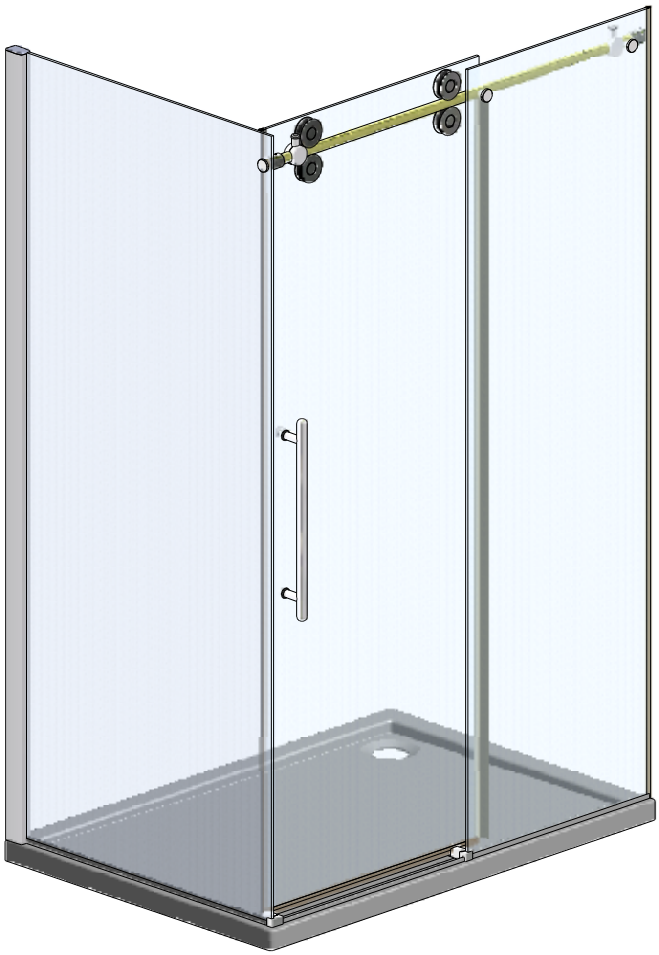

KIB + KID2 + KIB

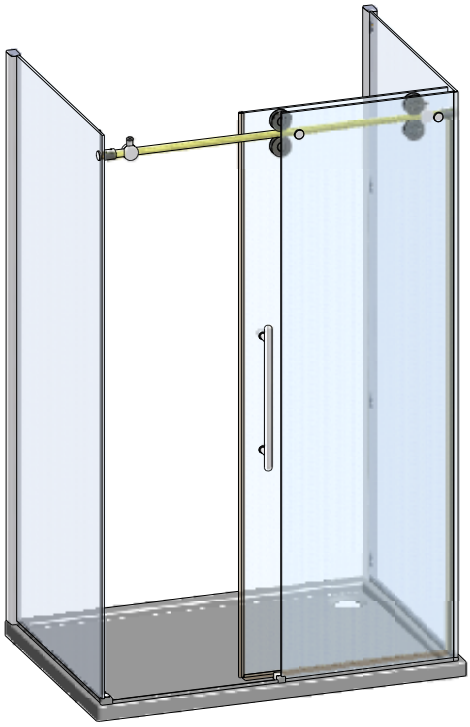

Roltechnik a.s.; Czech Republic, 56933 Třebařov 160,
tel.:+420 461 324 301/302, fax: +420 461 324 297,
http//:www.roltechnik.com; e-mail: objednavky@roltechnik.cz

R01
MA1264

KIB + KID2

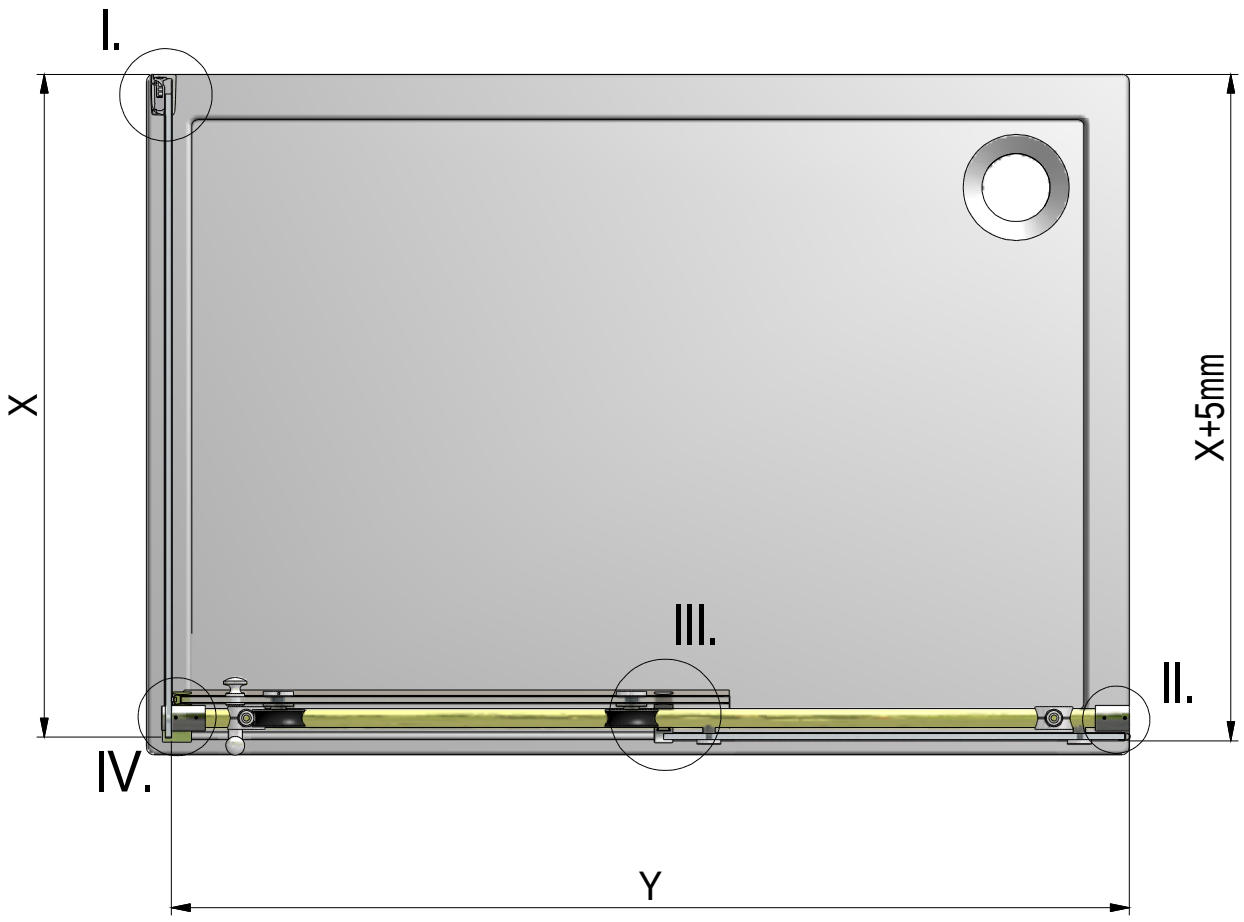

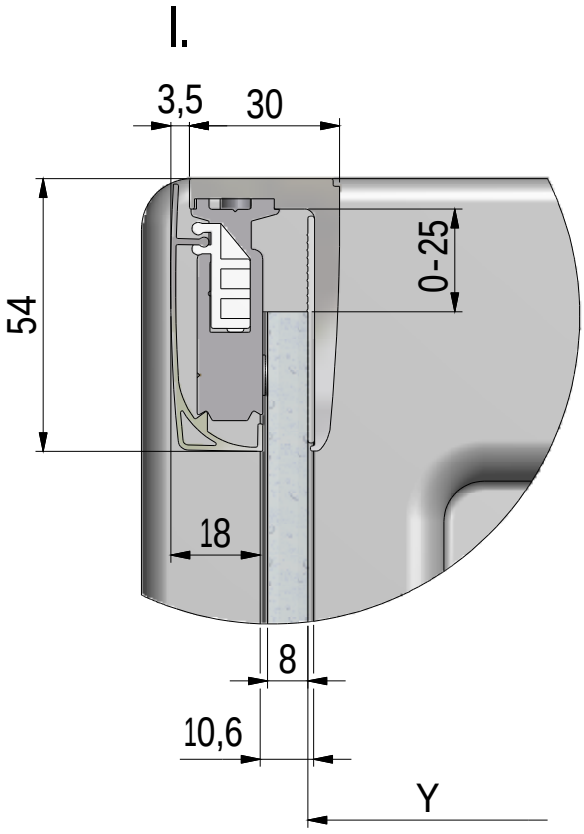

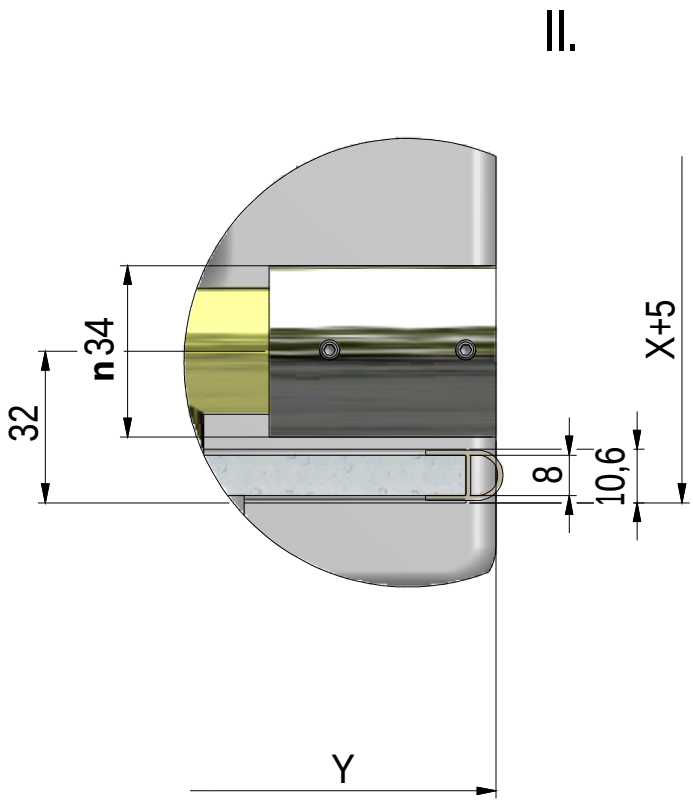

KIB + KID2 + KIB

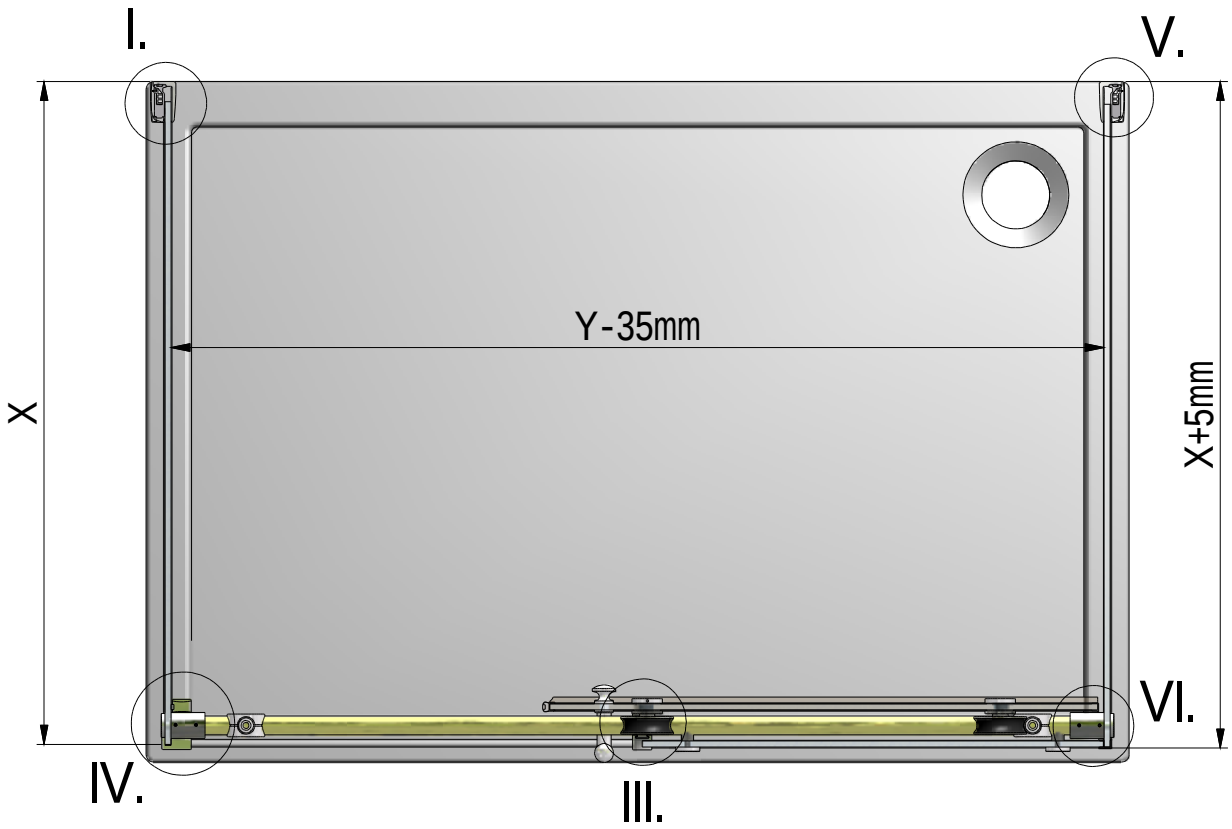
I.
V.
Y-35mm
X
X+5mm
VI.
IV.
III.

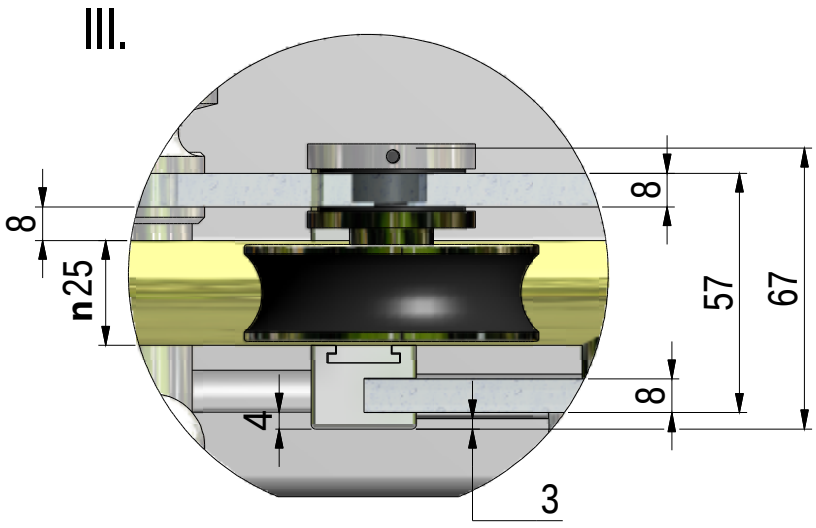
III.
8
n25
8
57
67
8
4
3

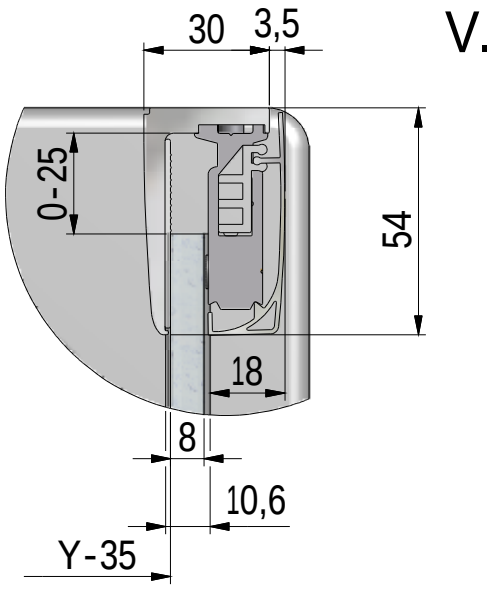
30
3,5
V.
0-25
54
18
8
10,6
Y-35

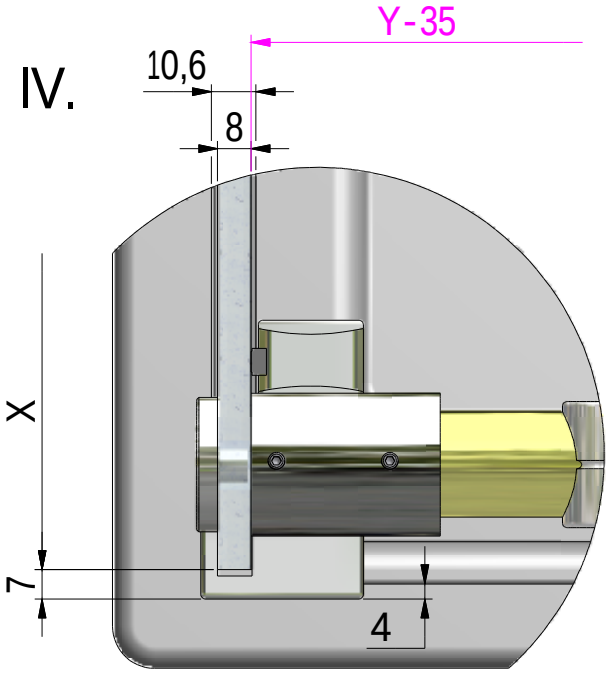
Y-35
IV.
10,6
8
X
7
4

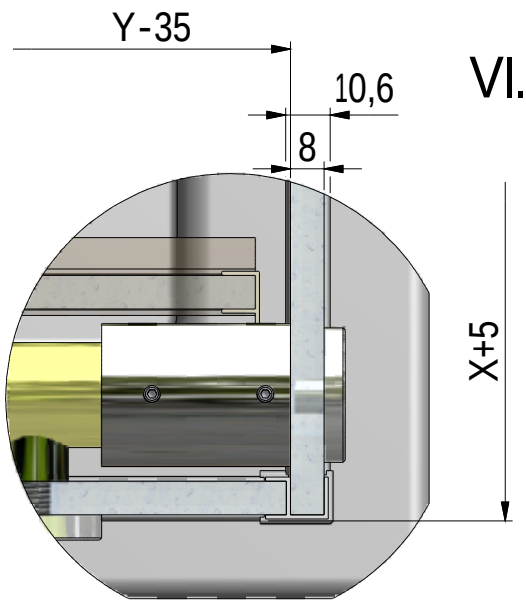
Y-35
10,6
VI.
8
X+5

	KID2		KIB	
	Y (mm)		X (mm)	
	MIN	MAX	MIN	MAX
900	-	-	855	880
1000	-	-	955	980
1300	1150	1310	-	-
1500	1300	1510	-	-
1800	1500	1810	-	-
2000	1800	2010	-	-

1. 1x
V51

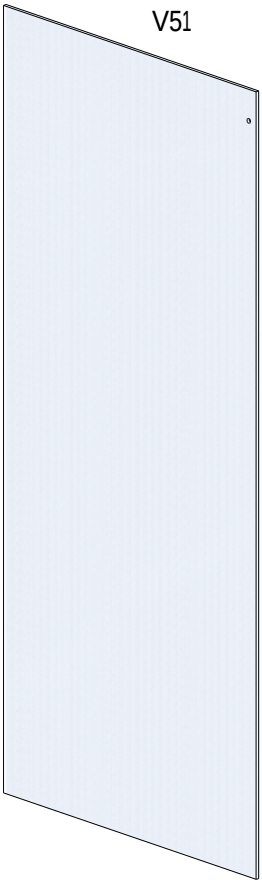

4. 1x



6. 1x
P2294



2. 1x
P133

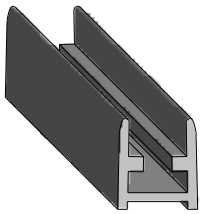

5. 1x
M9132

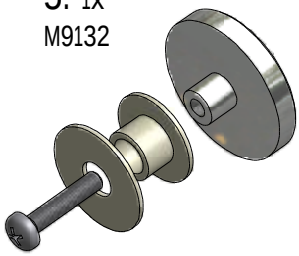

7. 5x
M0511



8. 4x
M0811



9. 4x
M5974



10. 4x
M5975



11. 4x
M5924

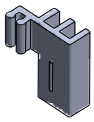

12. 4x
M5925

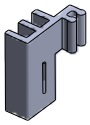

18. 1x
M0787



29. 1x
MA0747

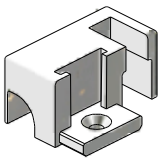

30. 1x
MA0746

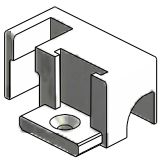

34. 1x
M6646

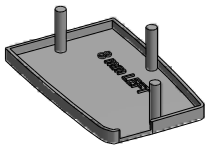

35. 1x
M6645

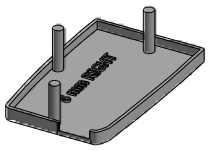

KIB + KID2 + KIB

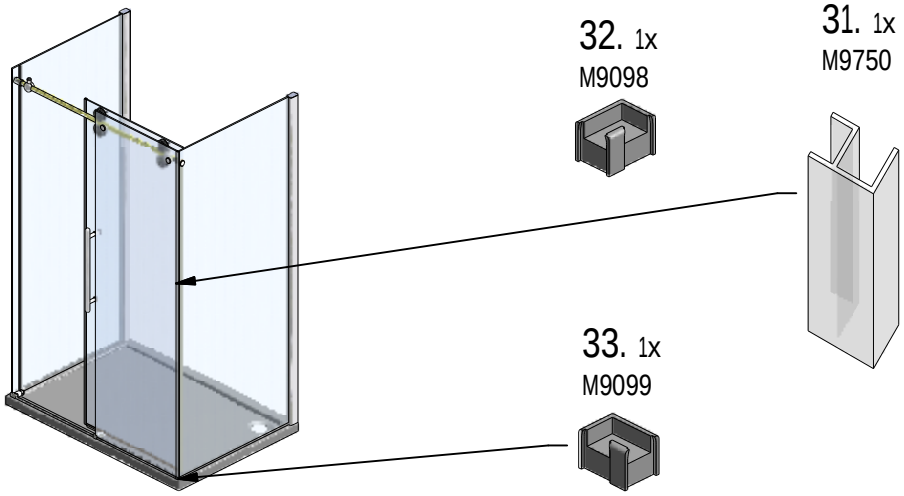

32. 1x
M9098

31. 1x
M9750

33. 1x
M9099

KIB+KID2

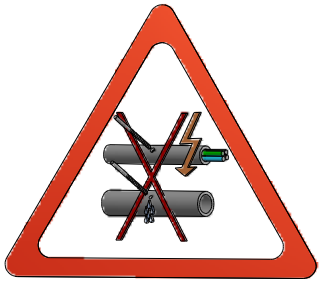

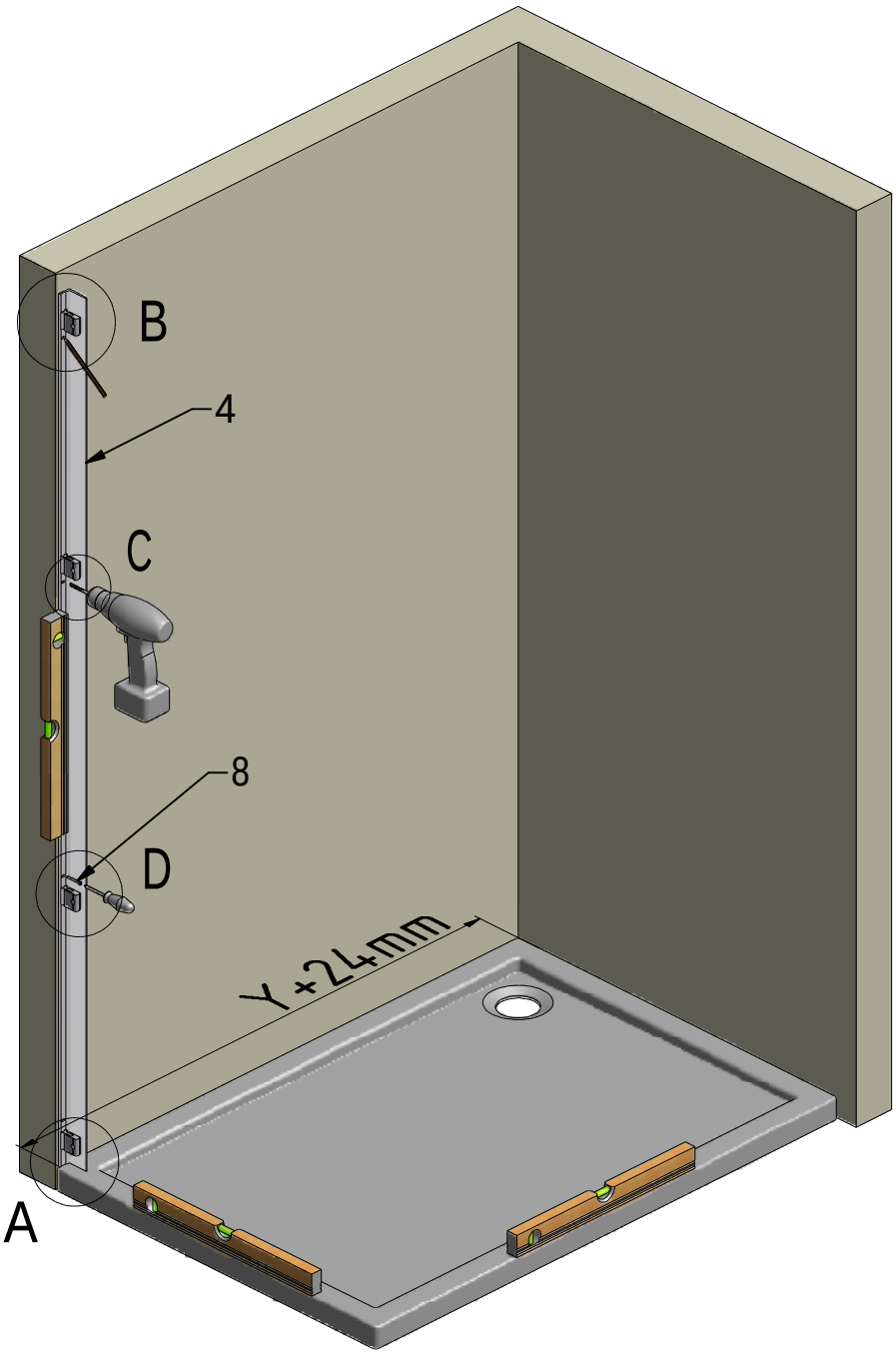

A

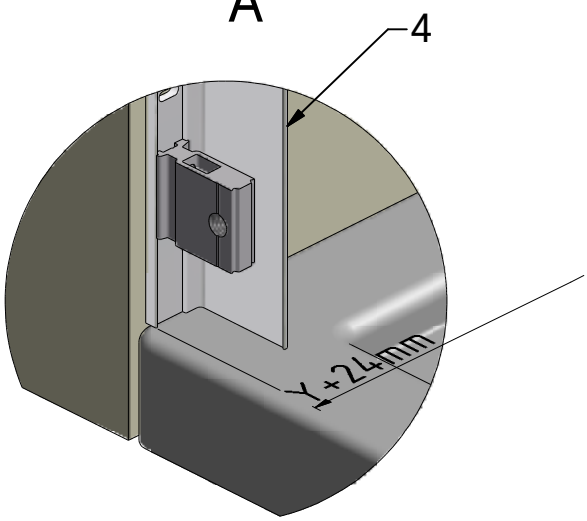

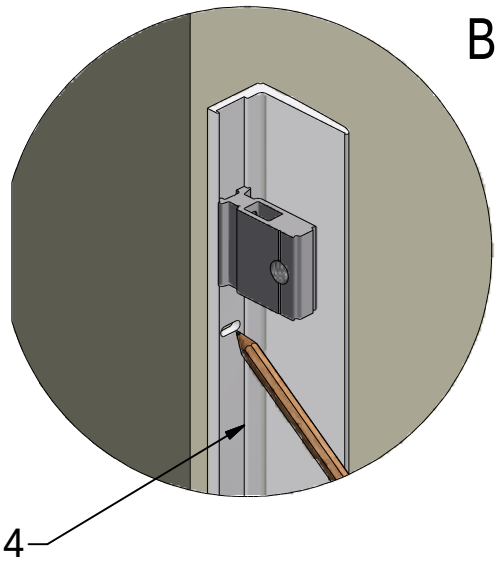

D

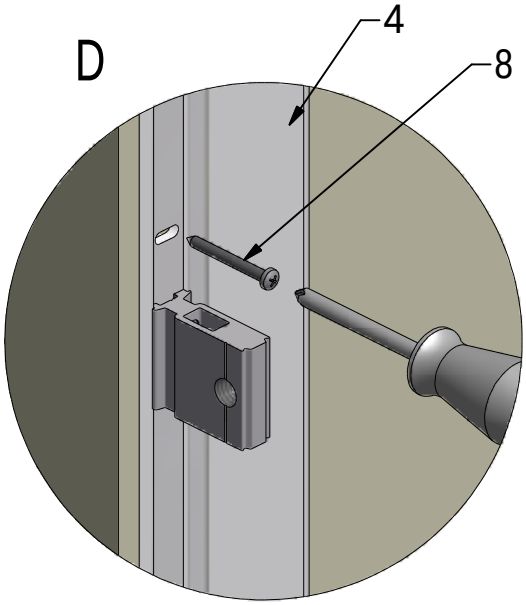

C2

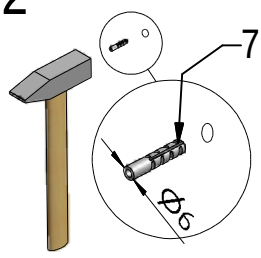

C1 4x

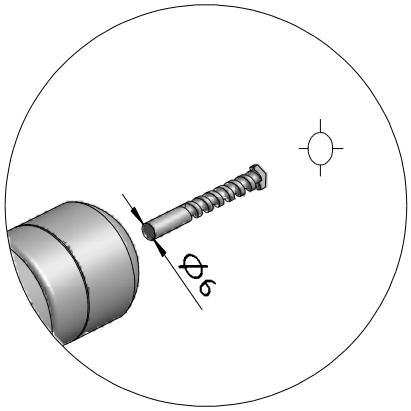

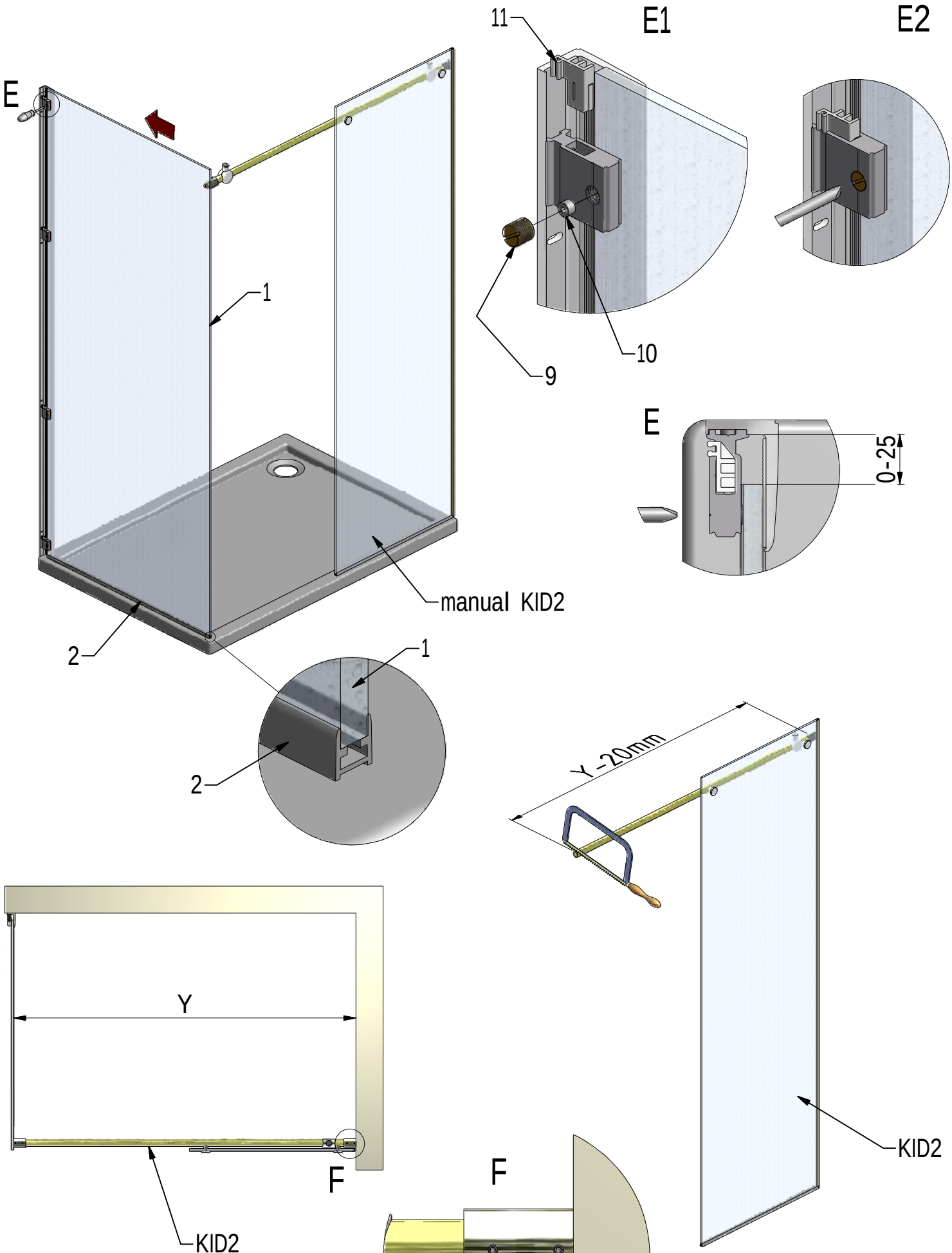
E
1
manual KID2
2
1
2
11
E1
E2
10
9
E
0-25
Y -20mm
Y
KID2
F
KID2
F

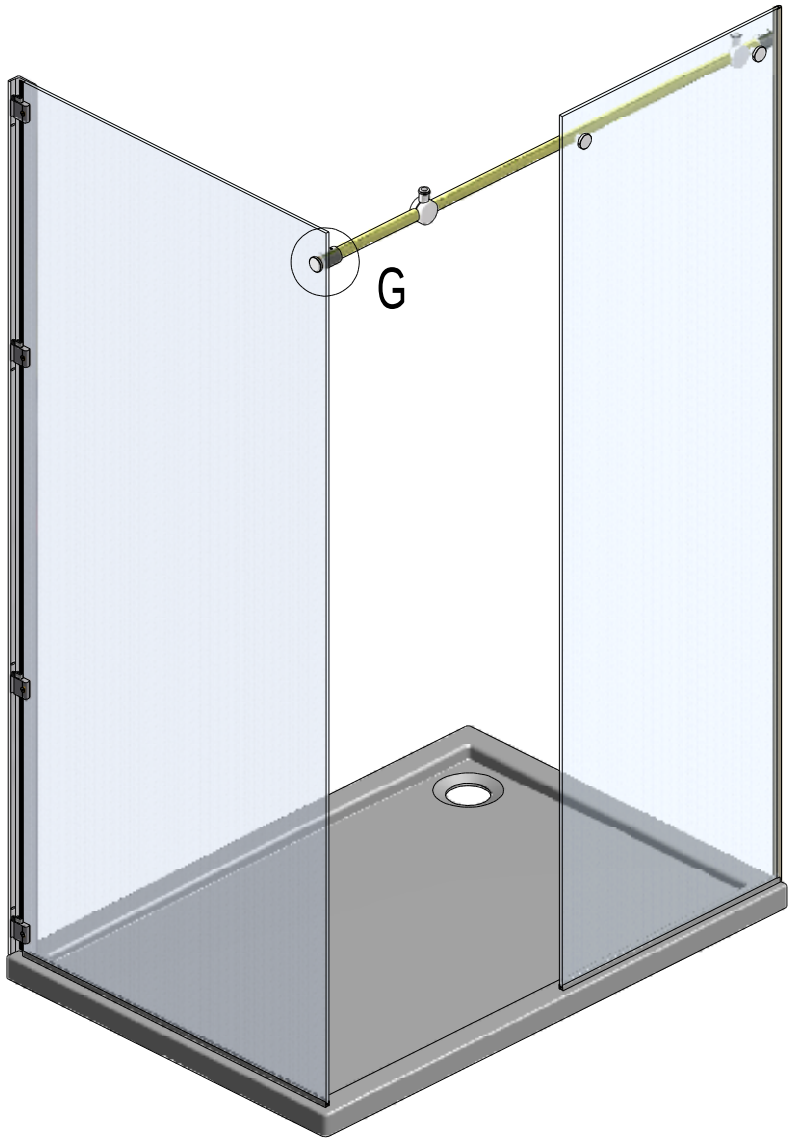
G

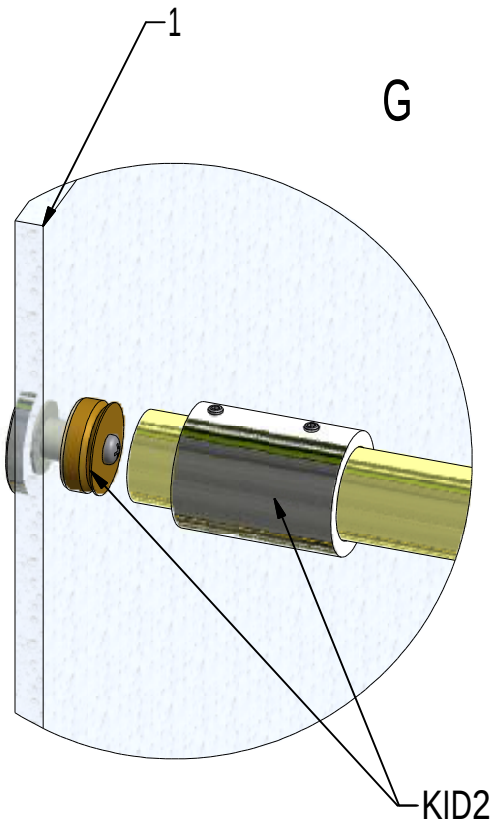
1
G
KID2

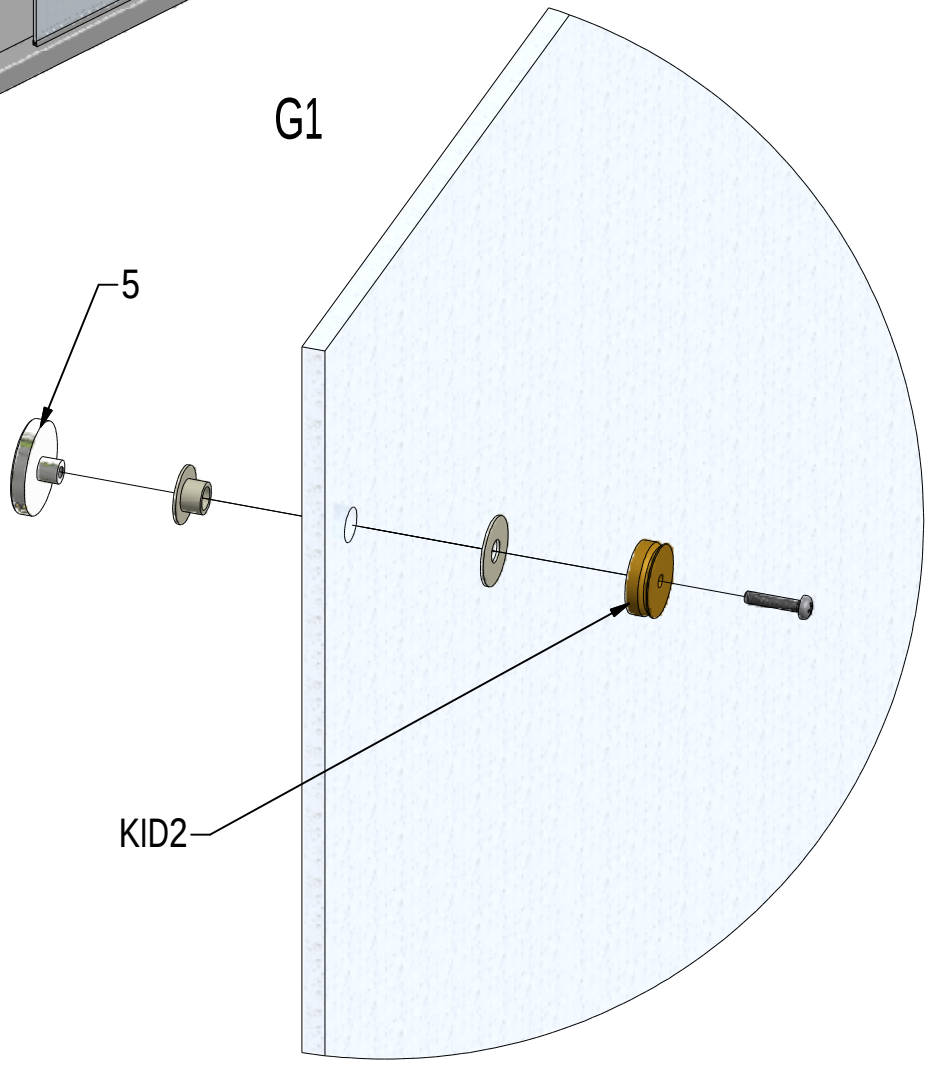
G1
5
KID2

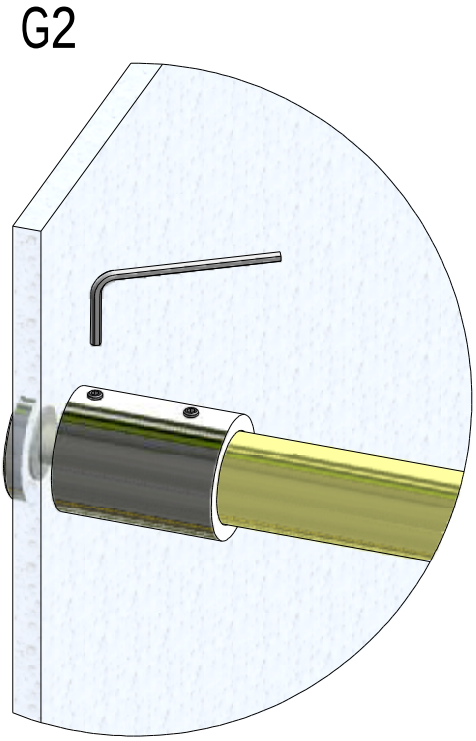
G2

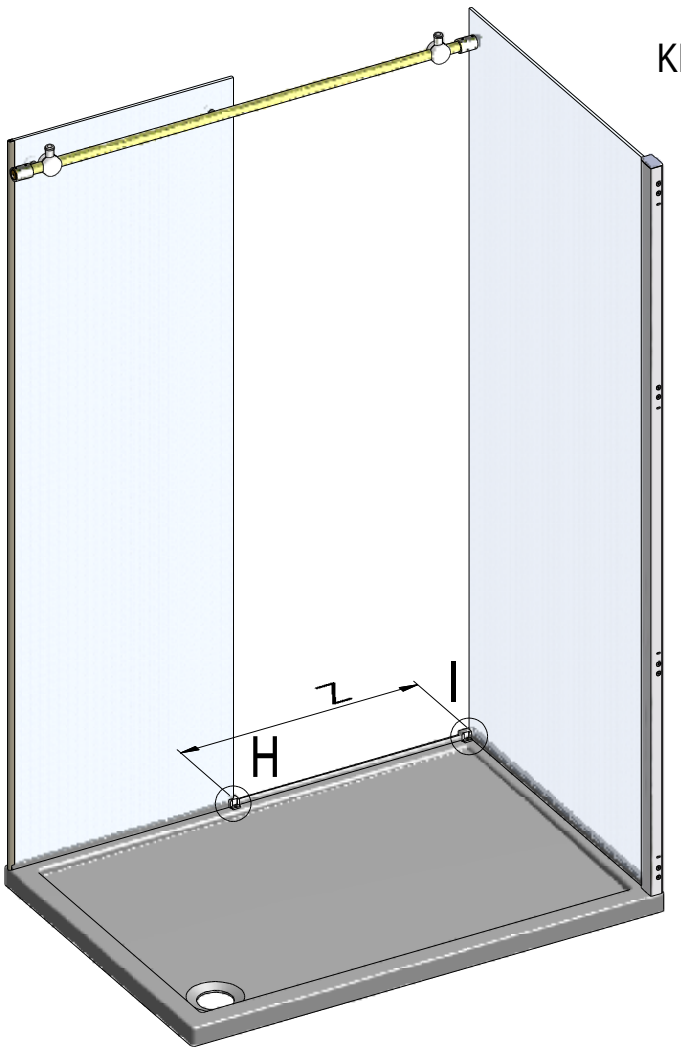

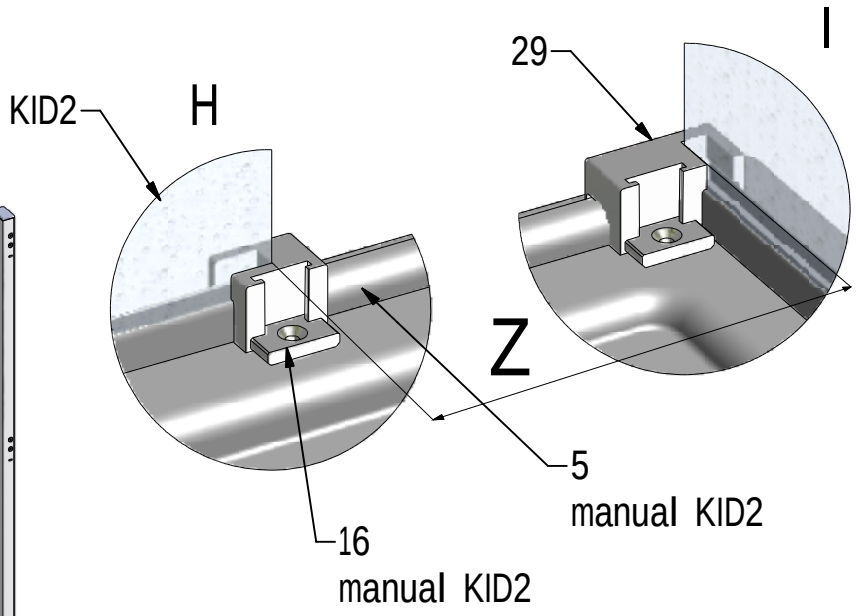

VARIANT A

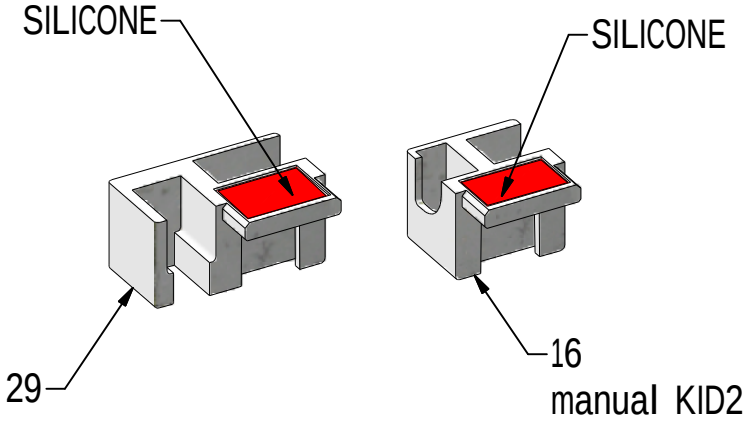

VARIANT B

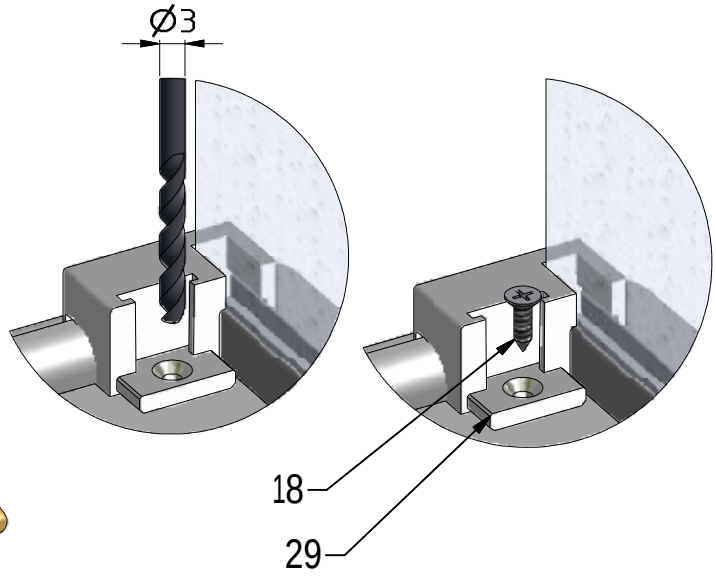

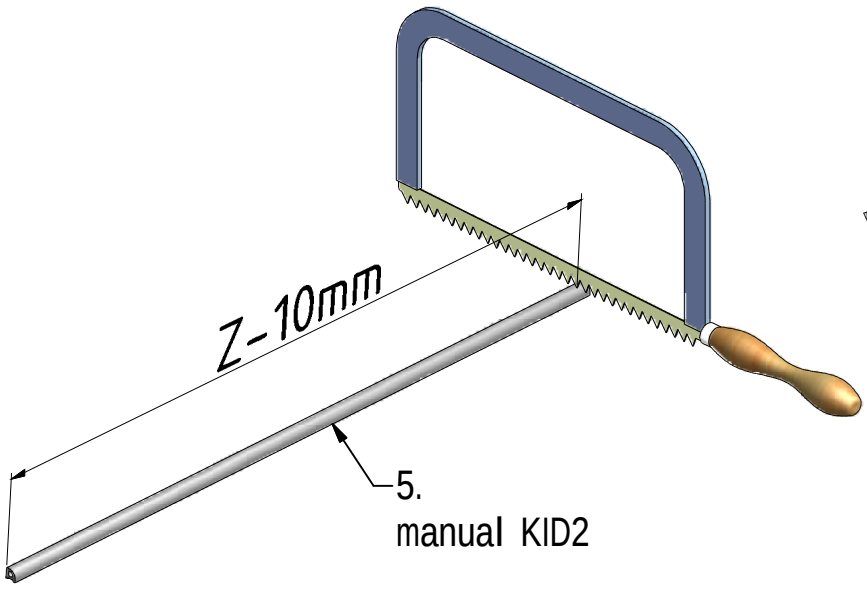

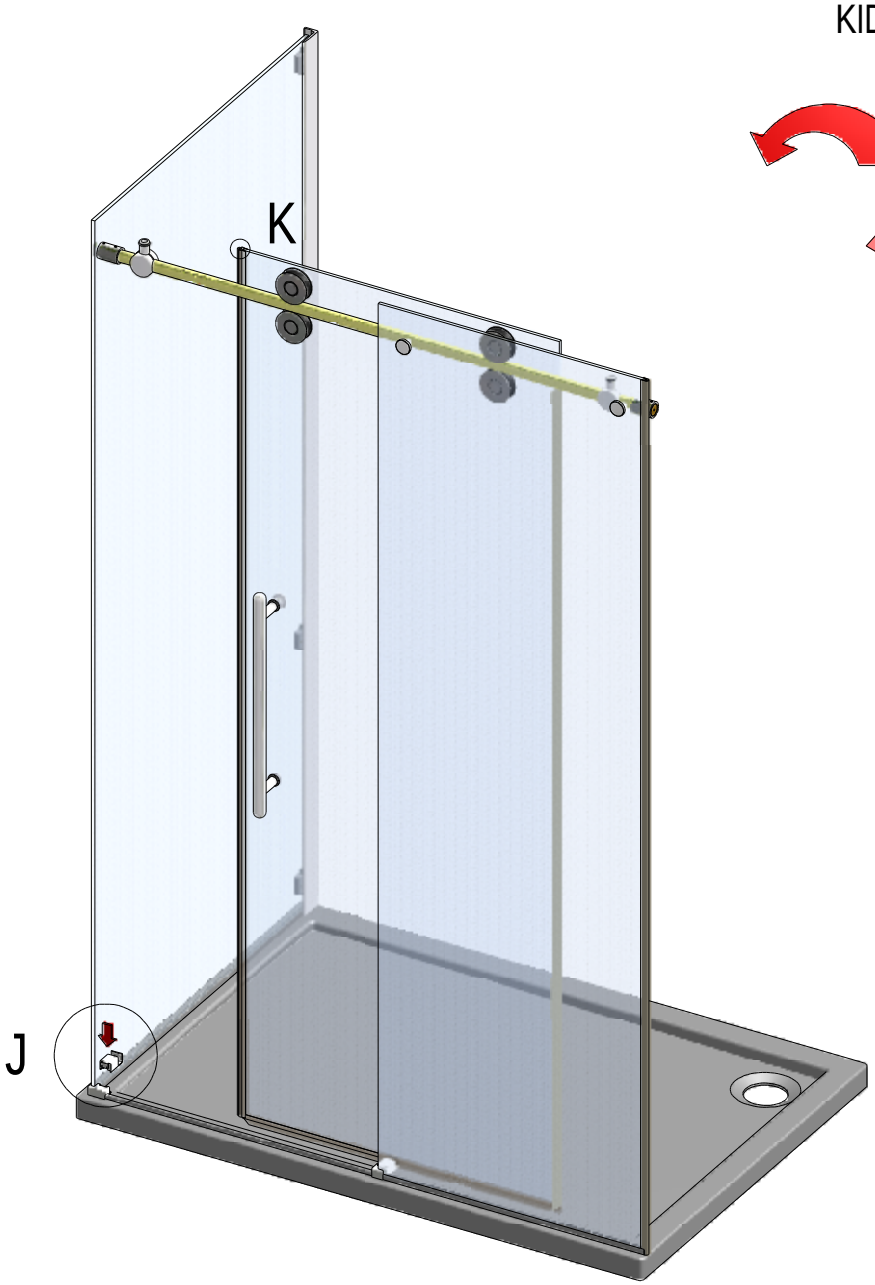
K
J

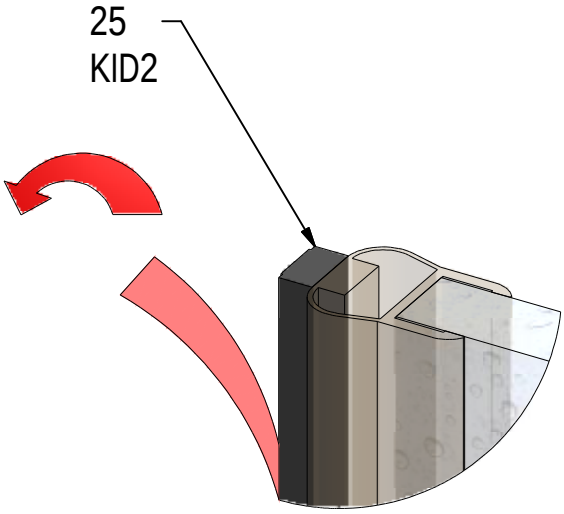
25
KID2
K1

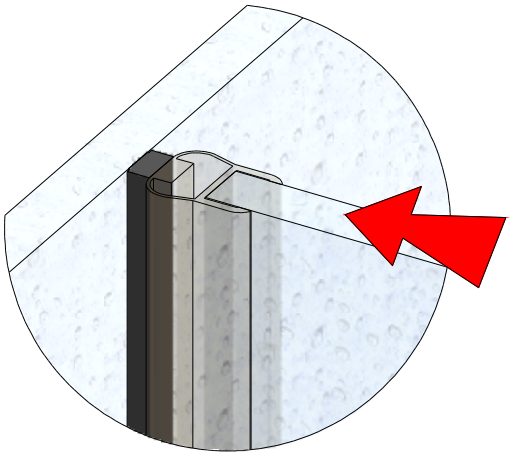
K2

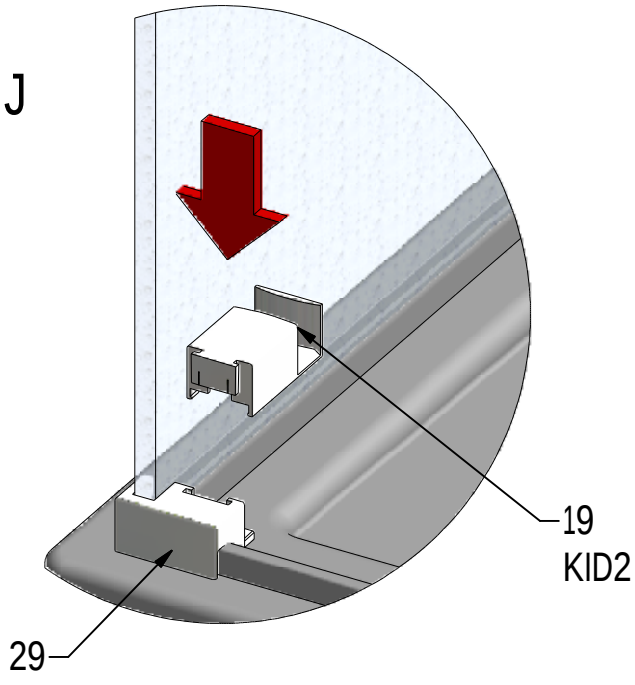
J
19
KID2
29

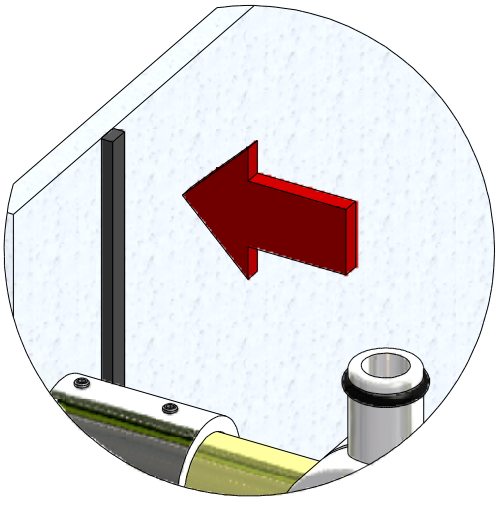
K3


24 h

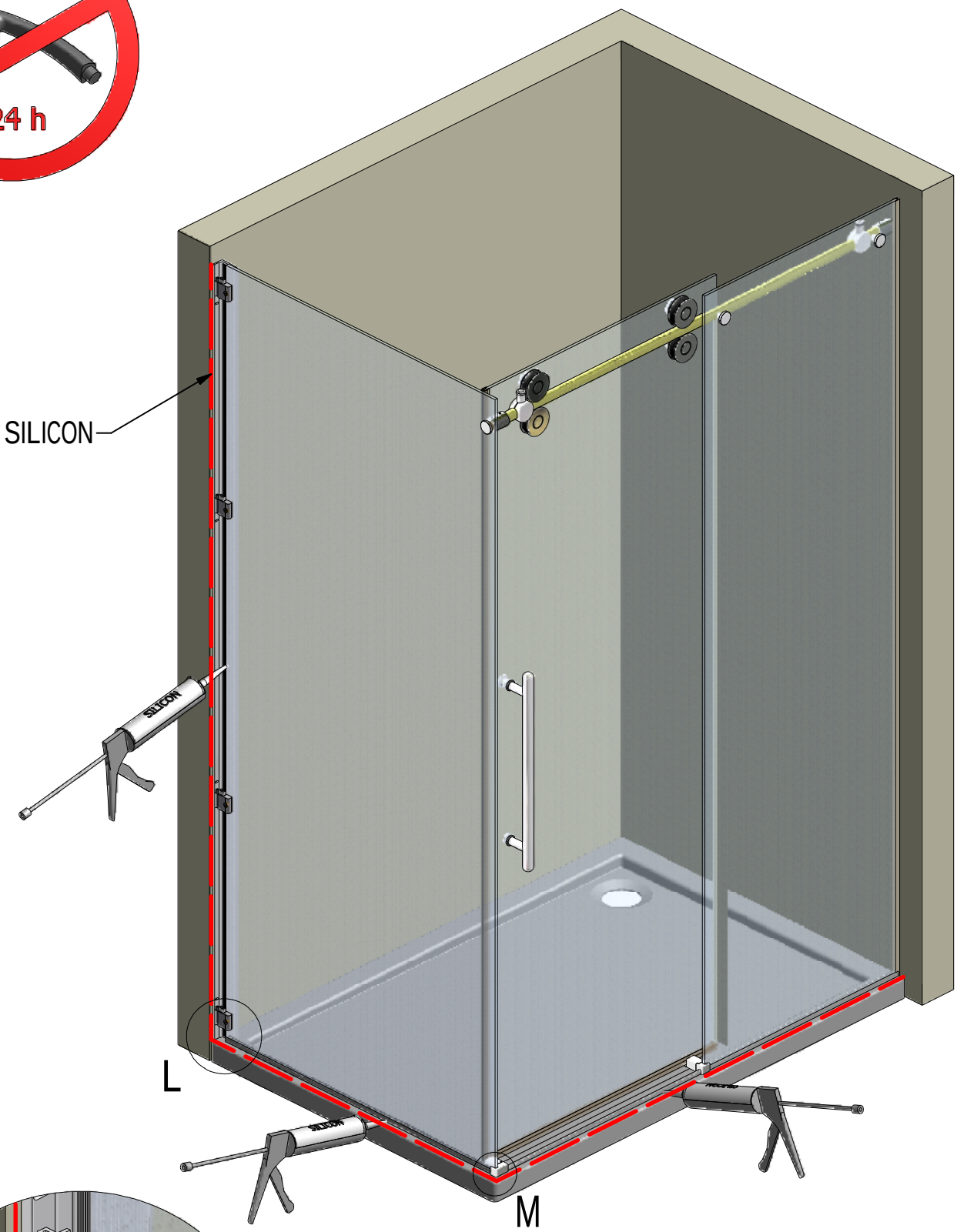
SILICON
L
M

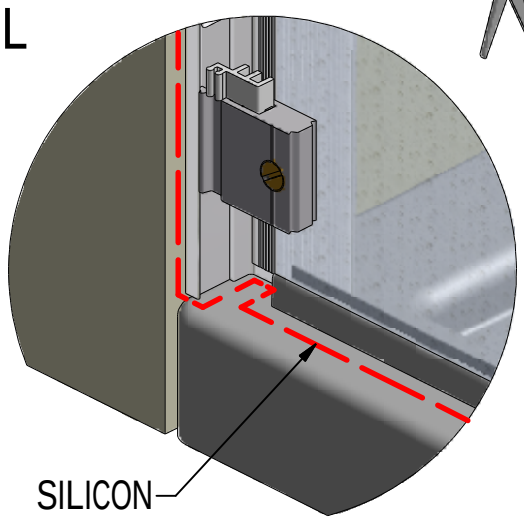
L
SILICON

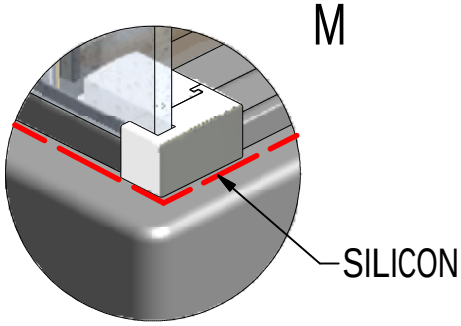
M
SILICON

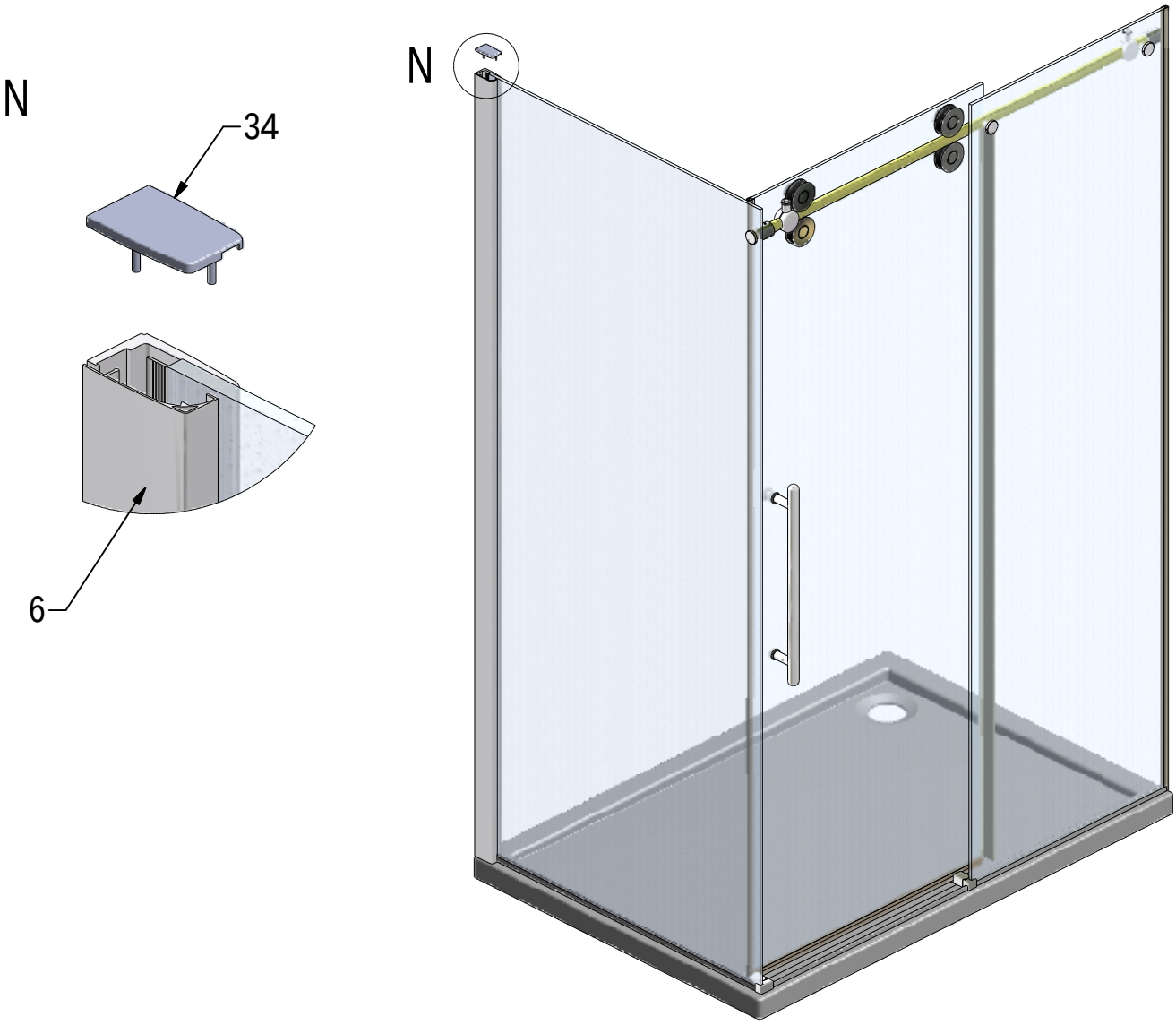
N
34
6
N

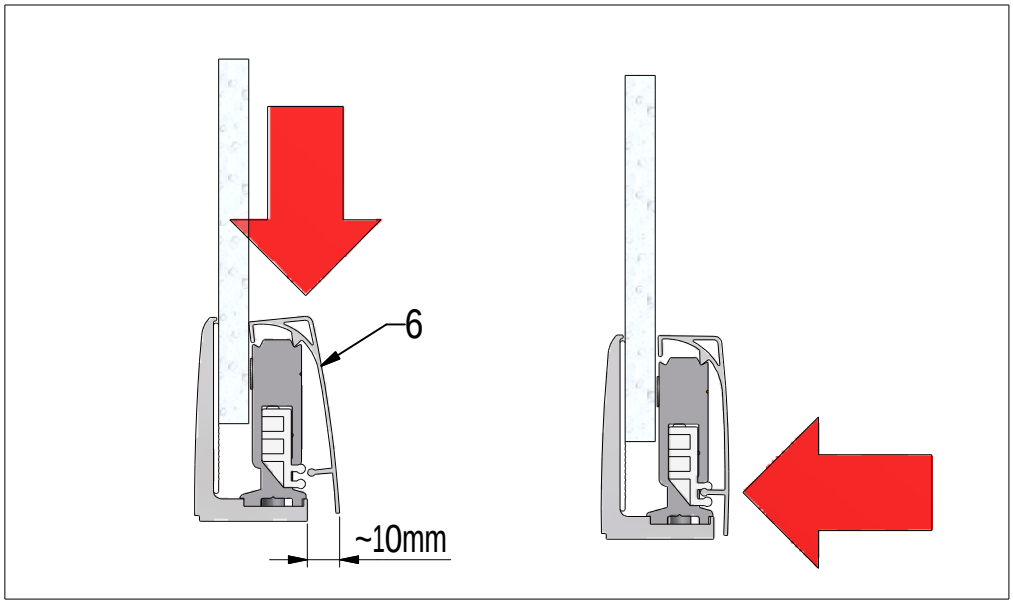
6
~10mm

KIB + KID2 + KIB

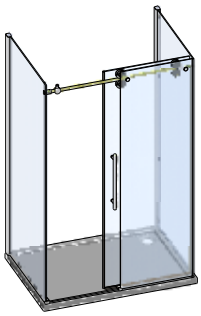

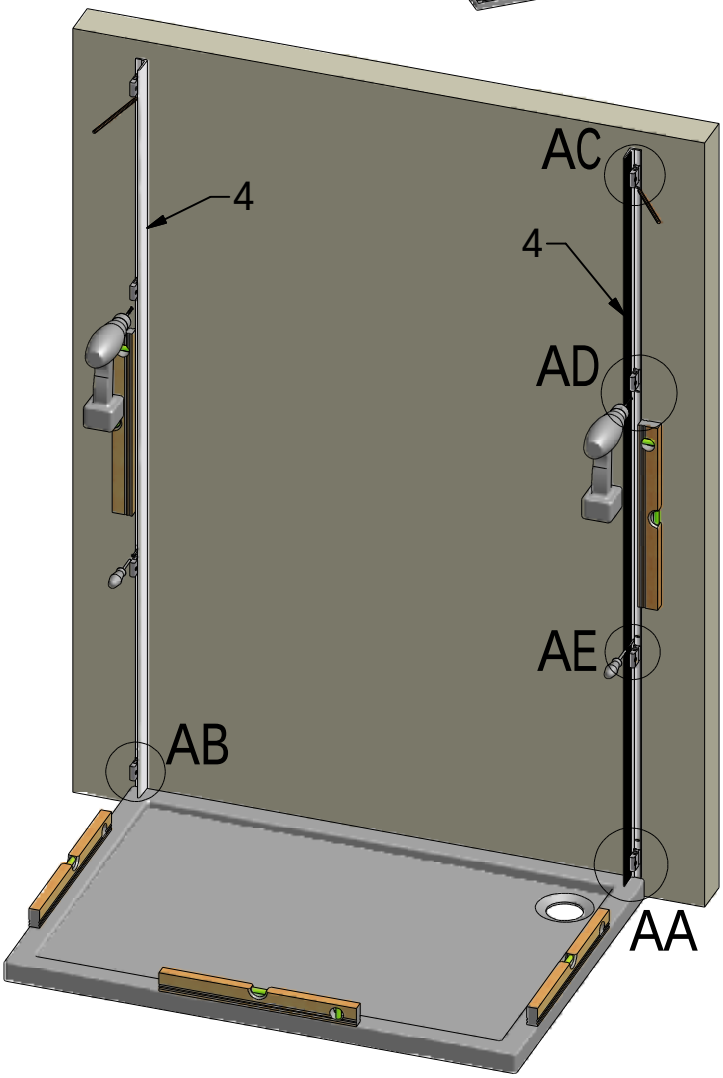

AA

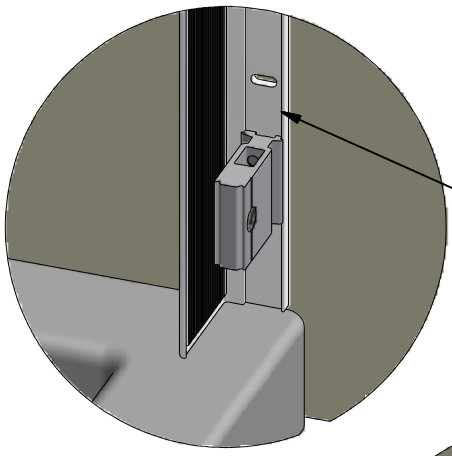

AB

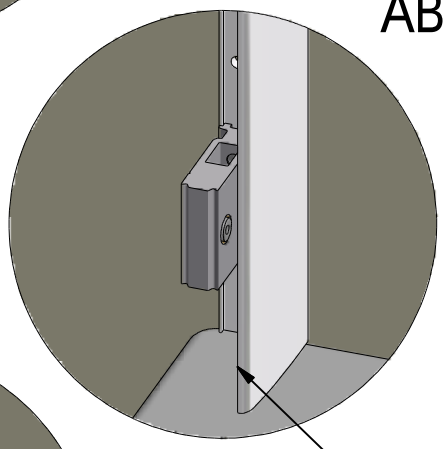

AC 8x

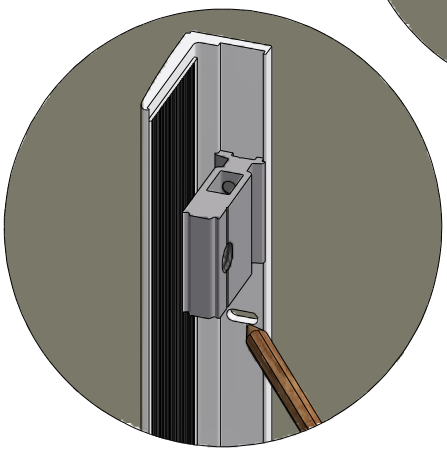

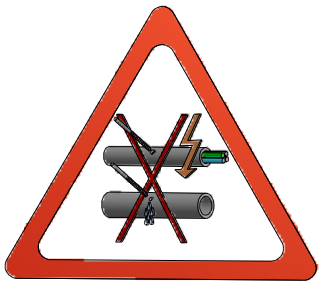

AE 8x

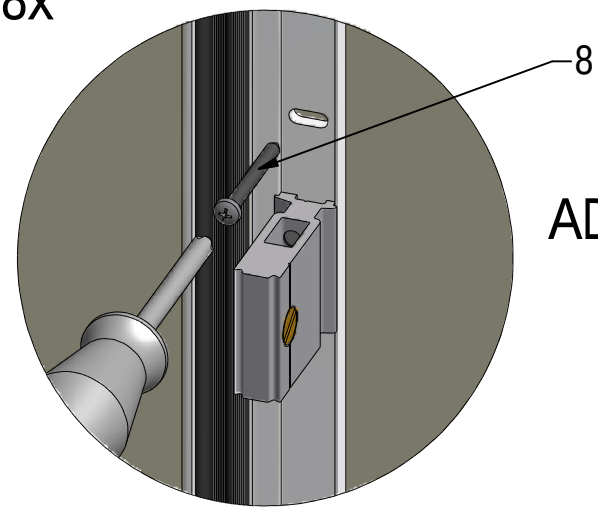

AD2 8x

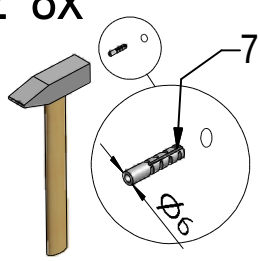

AD1 8x

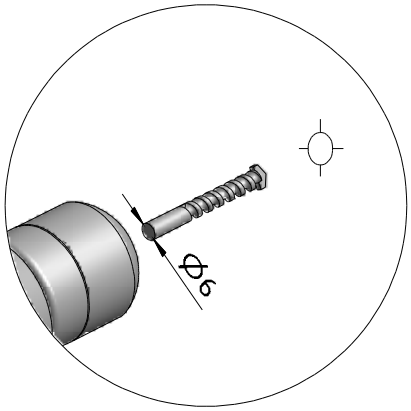

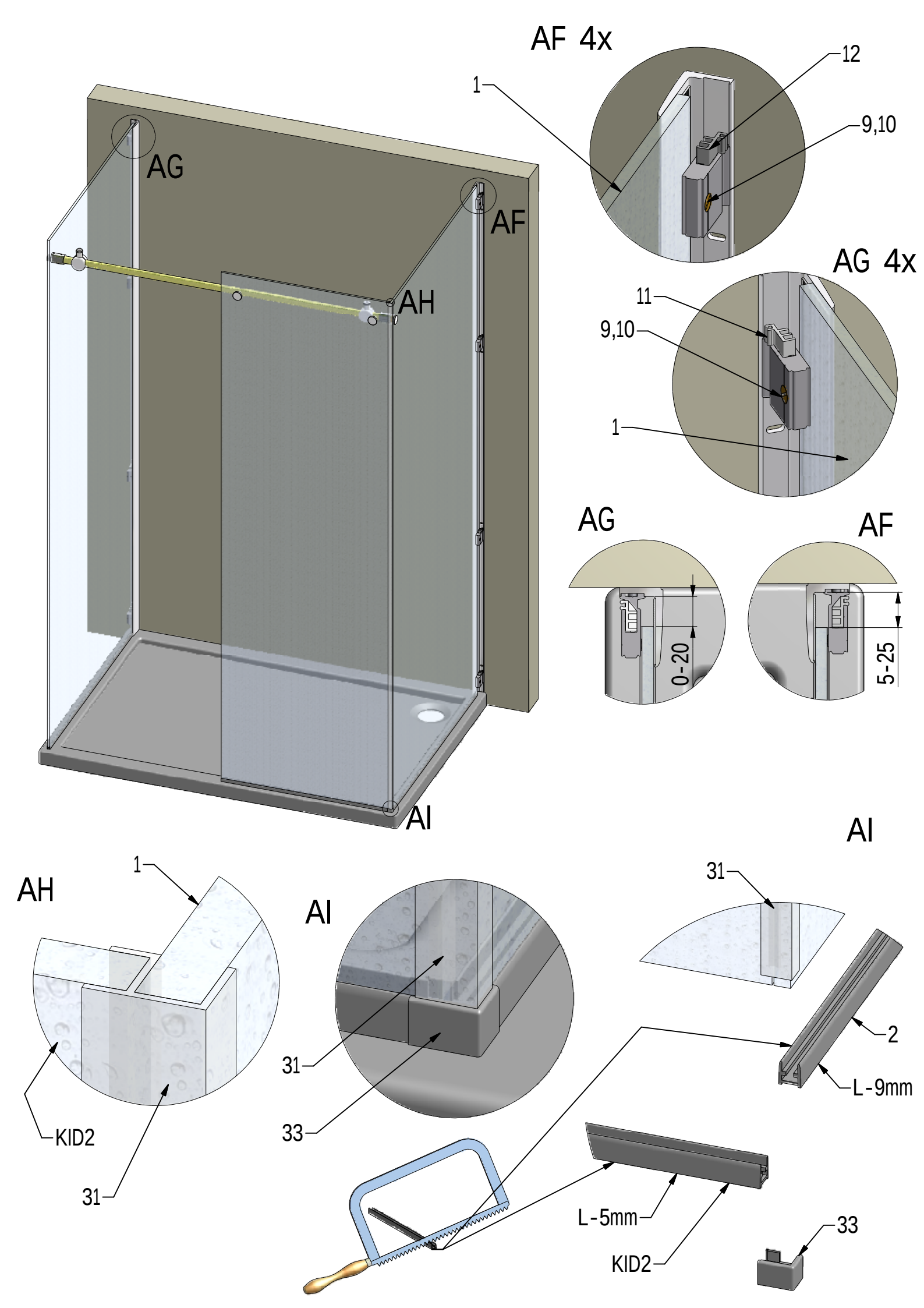
AF 4x
1
12
9,10
AG 4x
11
9,10
1
AG
AF
0-20
5-25
AG
AF
AH
AI
AH
1
KID2
31
AI
31
33
AI
31
2
L-9mm
L-5mm
KID2
33

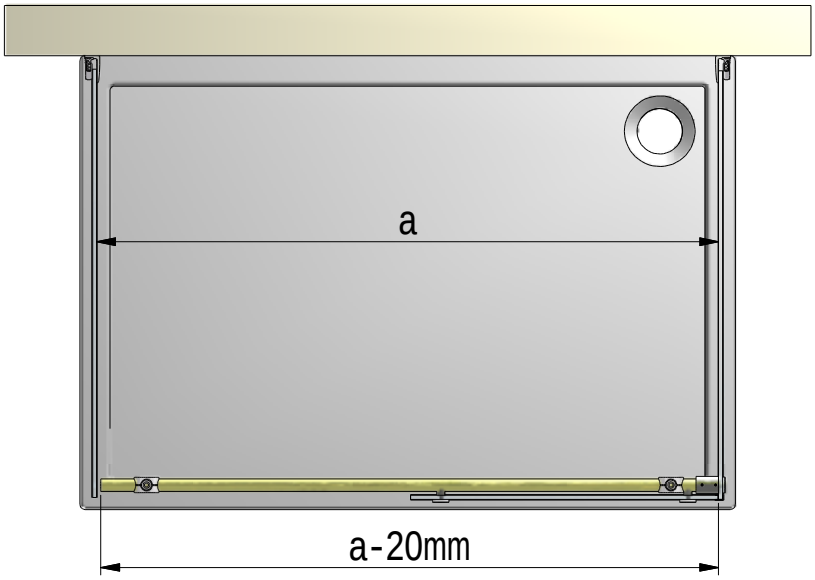

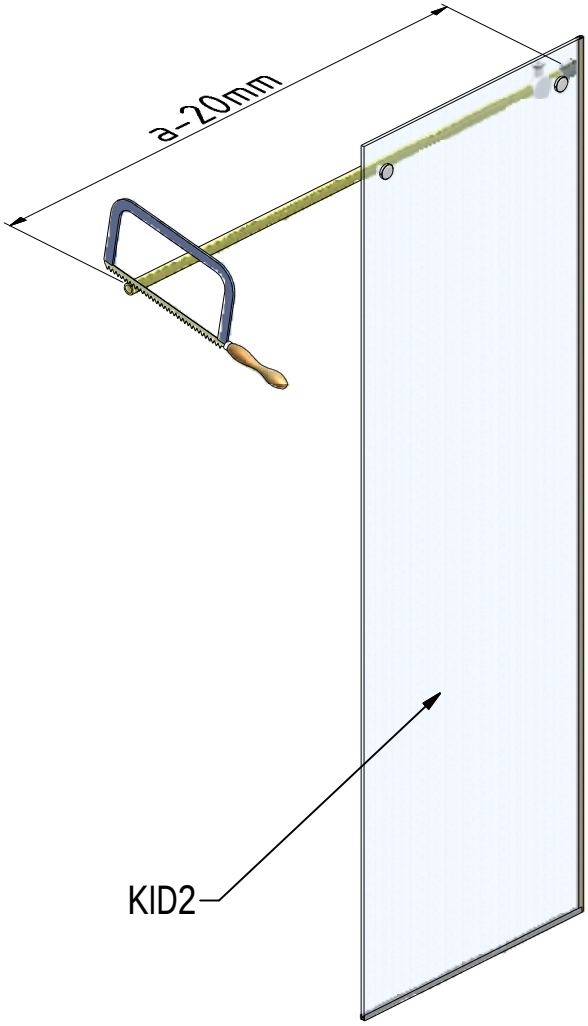

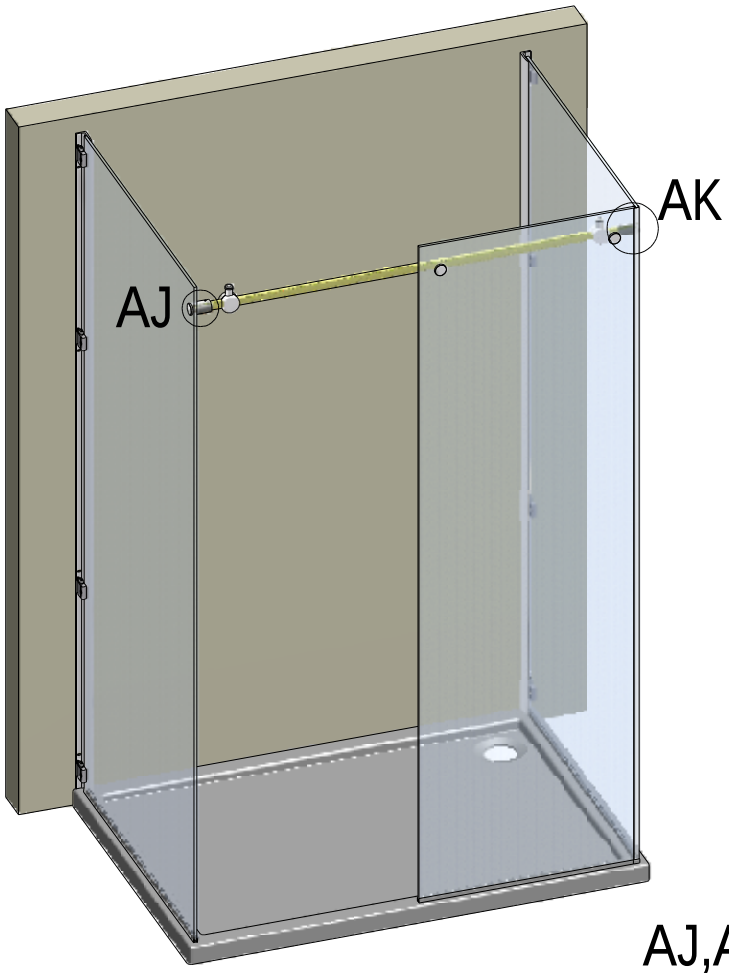

AJ,AK1

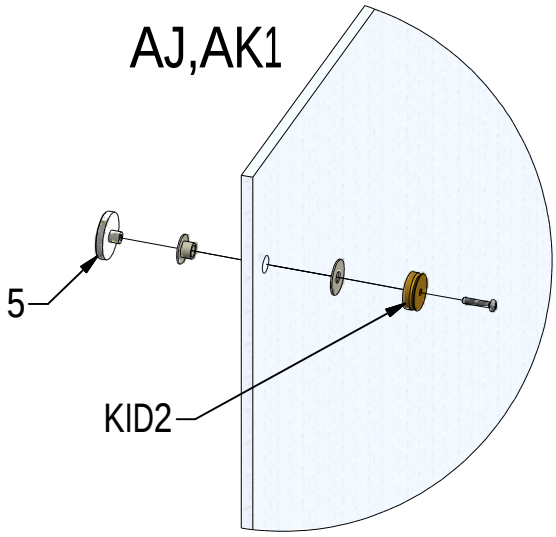

AJ,AK2

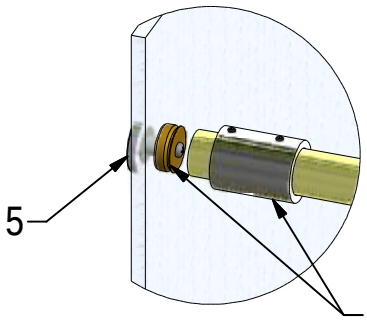

AJ,AK3

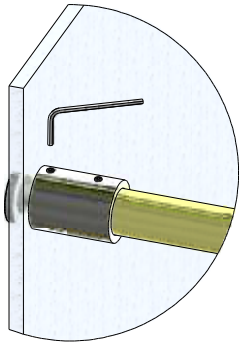

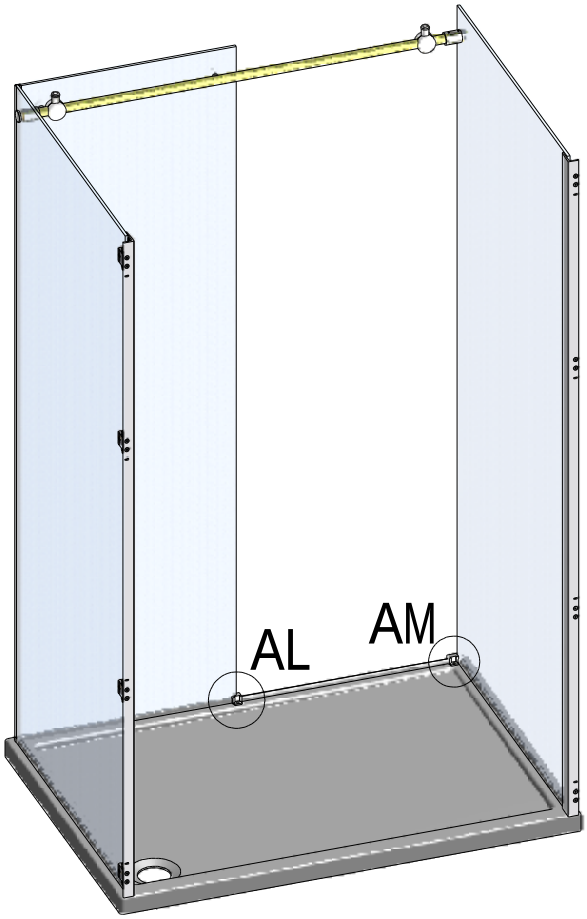

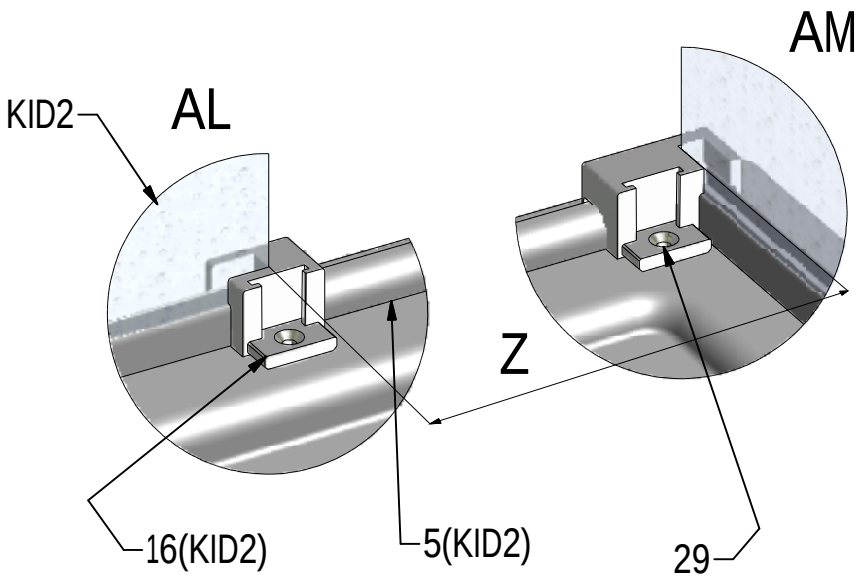

VARIANT A

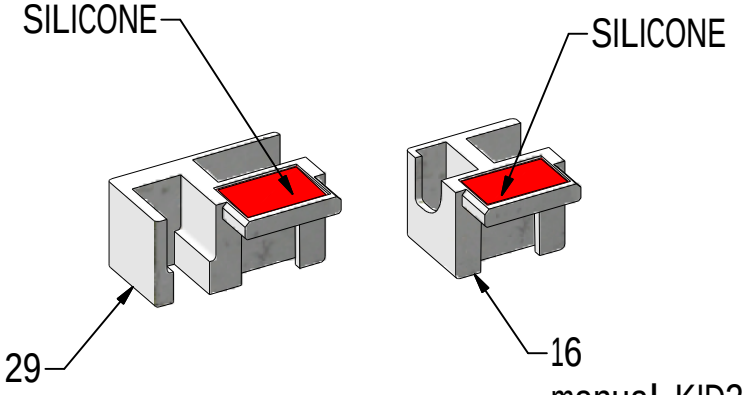

manual KID2

VARIANT B

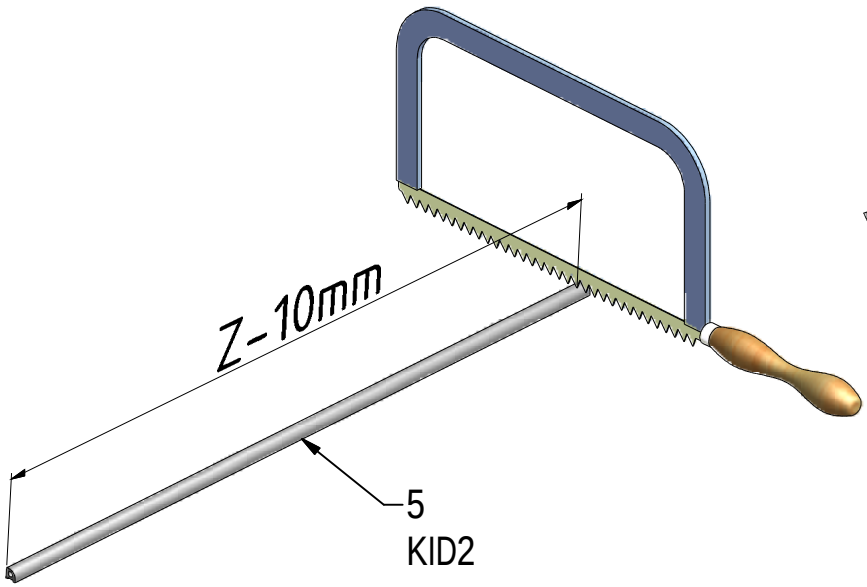

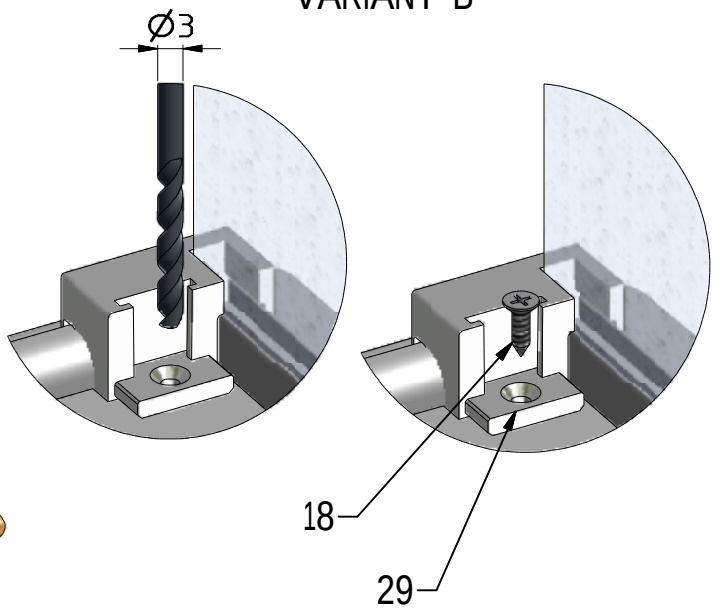

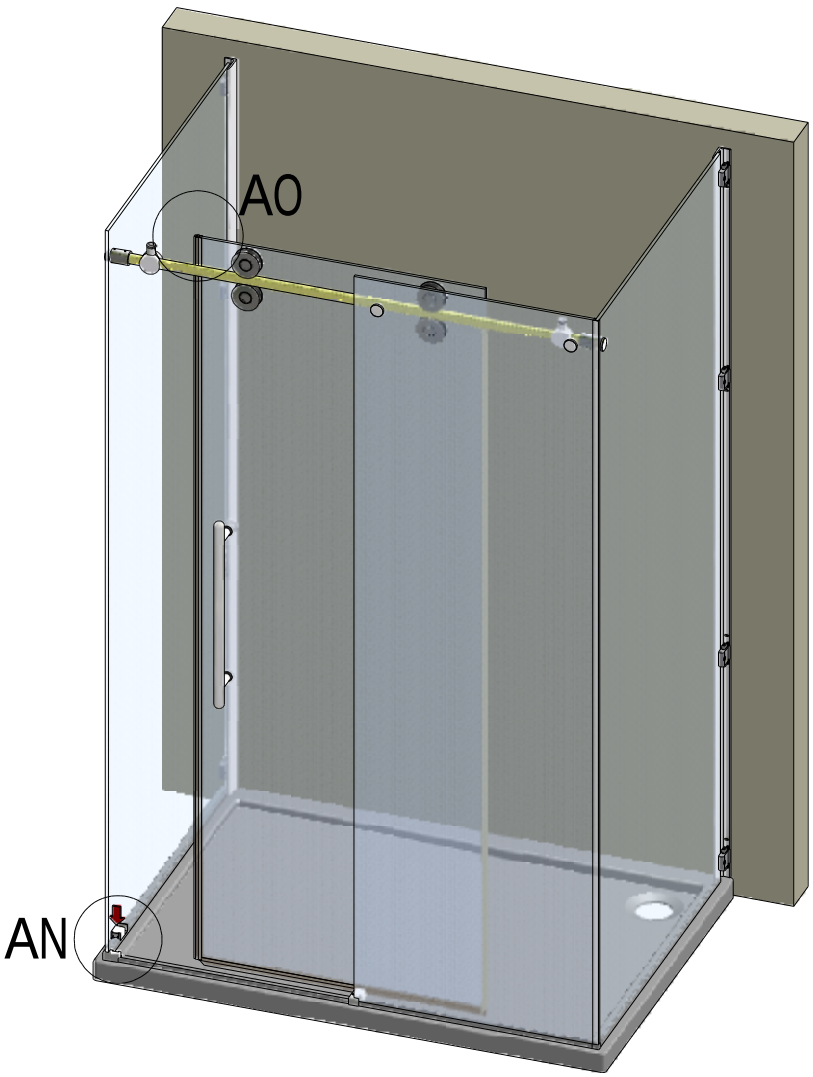
A0
AN

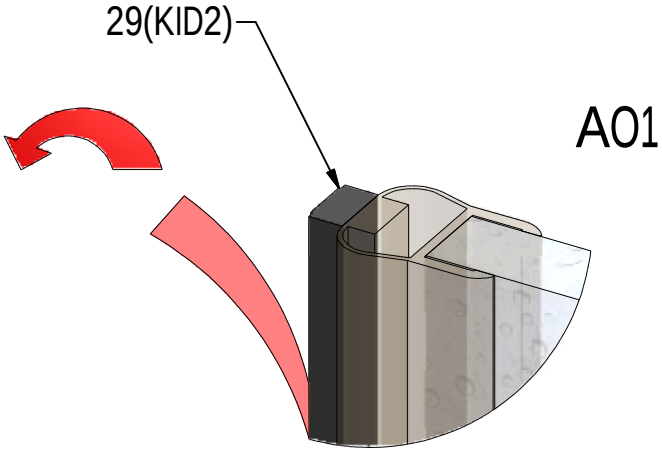
29(KID2)
A01

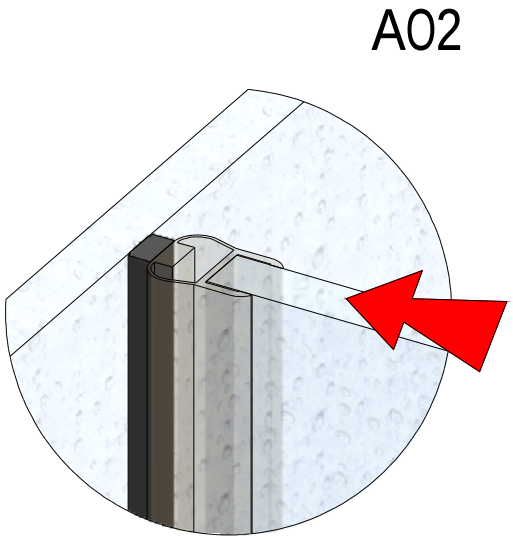
A02

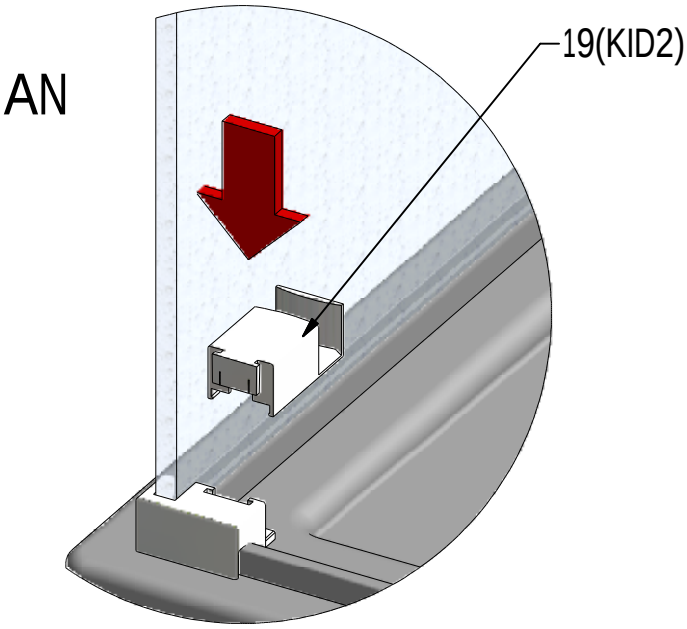
AN
19(KID2)

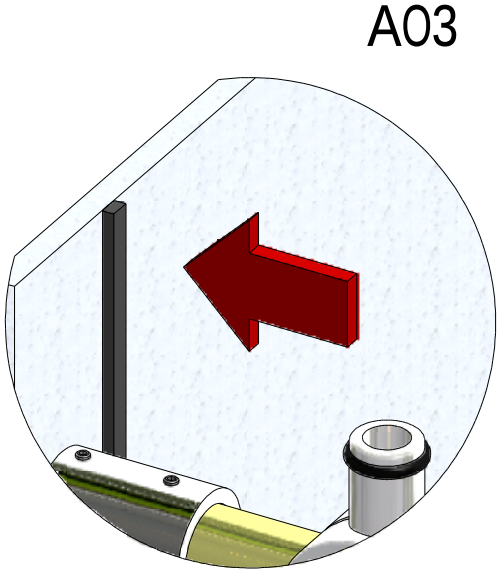
A03

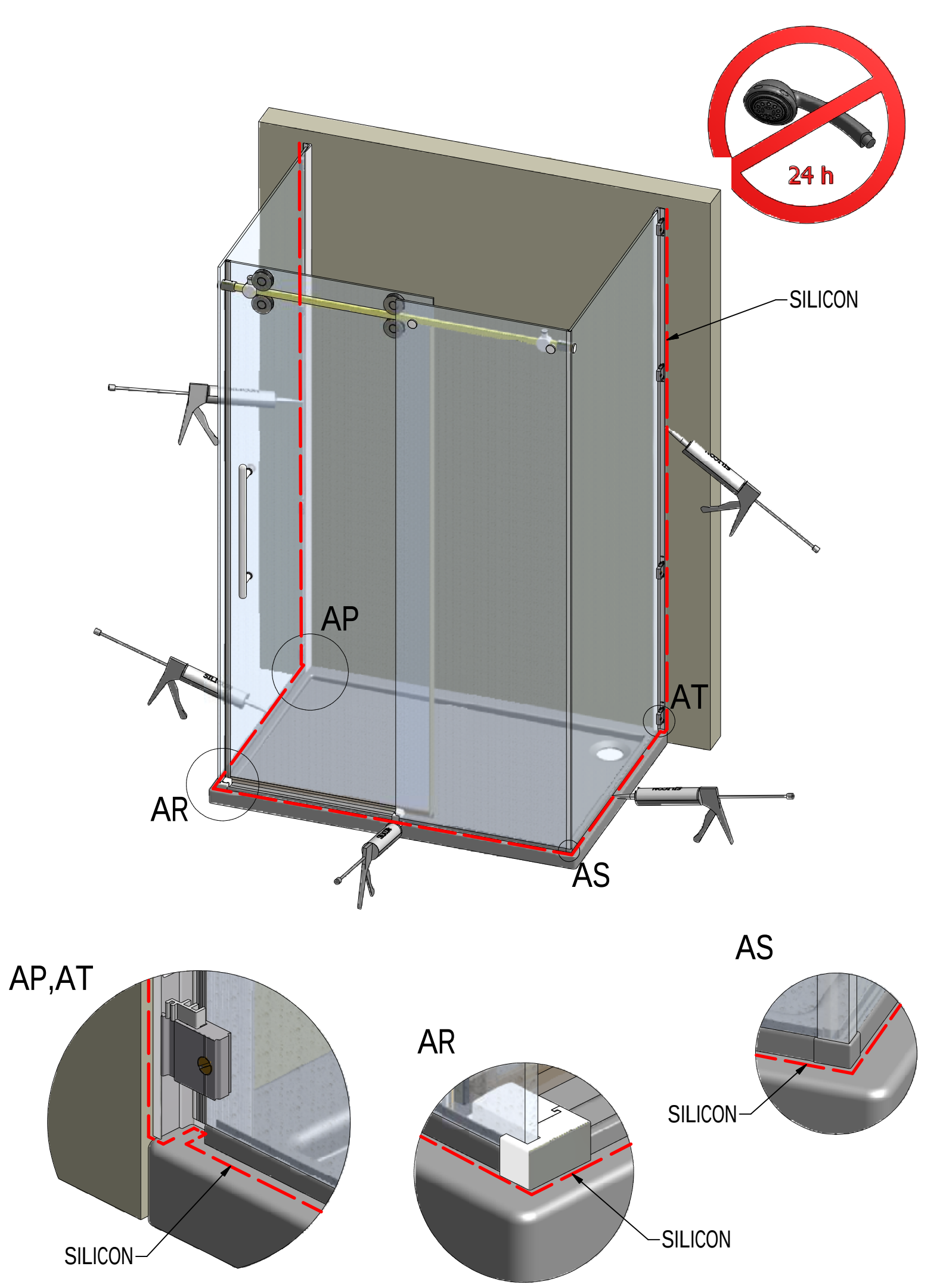
24 h
SILICON
AP
AT
AR
AS
AP,AT
SILICON
AR
SILICON
AS
SILICON

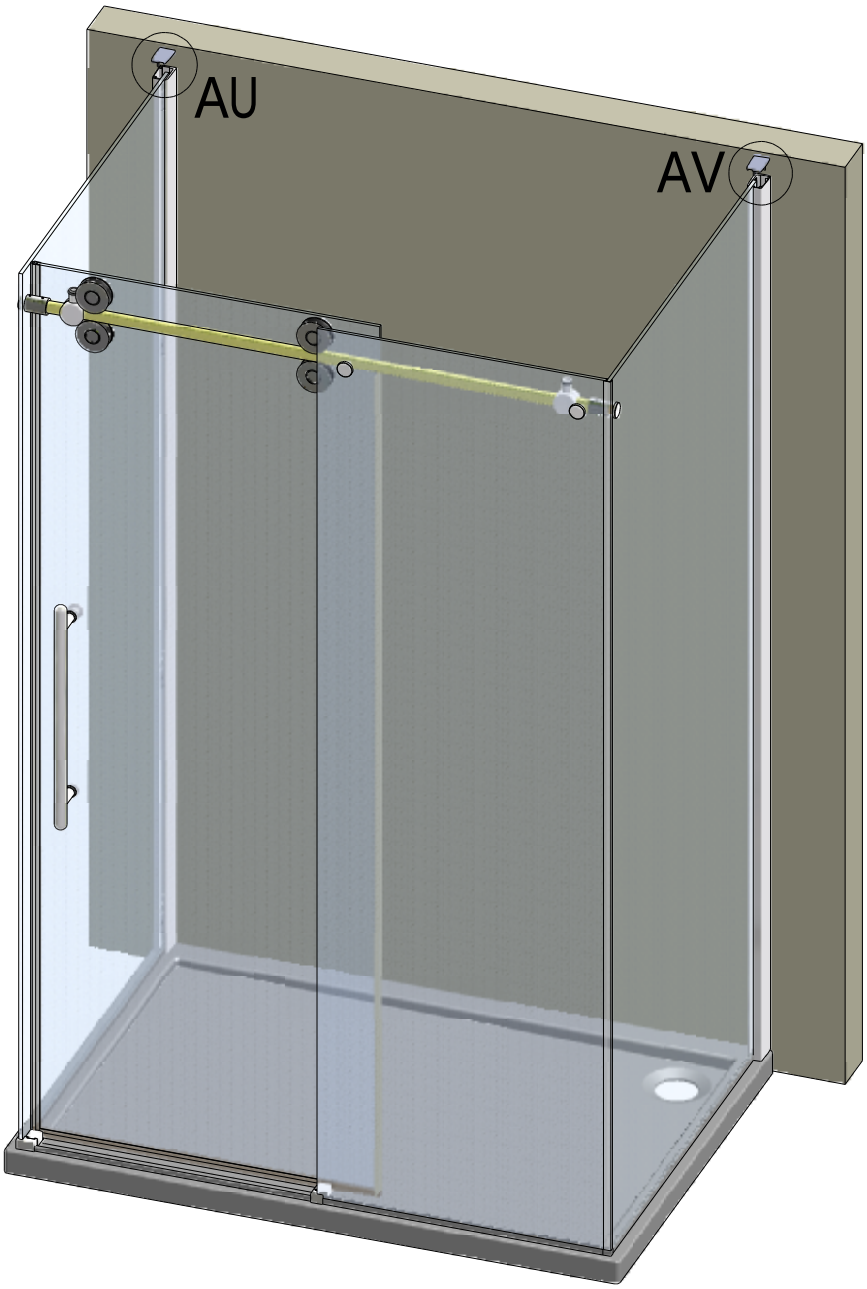
AU
AV

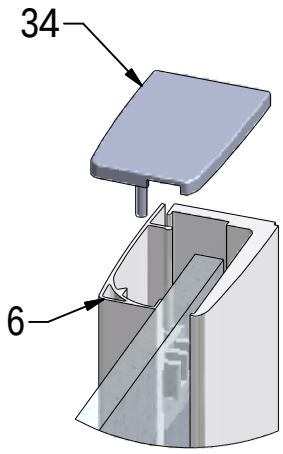
34
AU
6

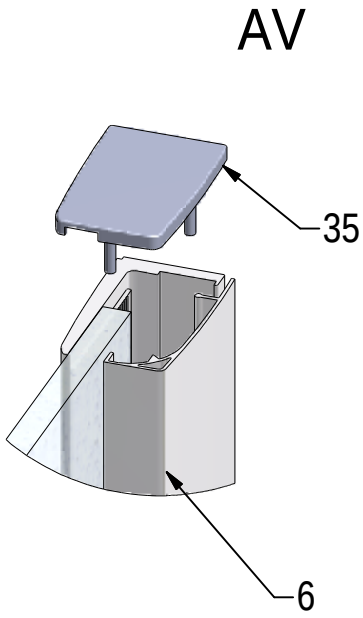
AV
35
6

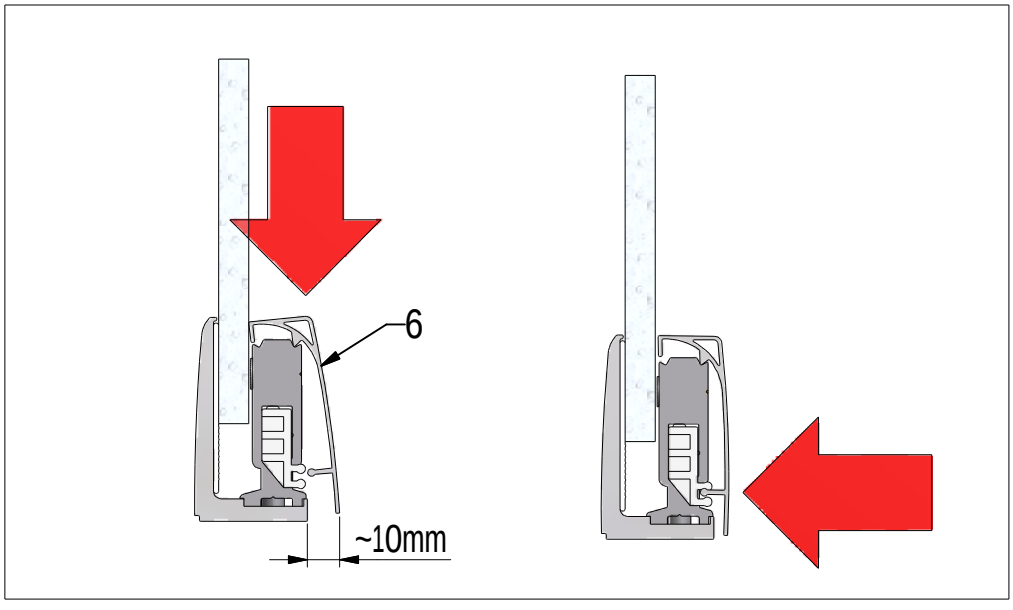
6
~10mm

KIB LEFT

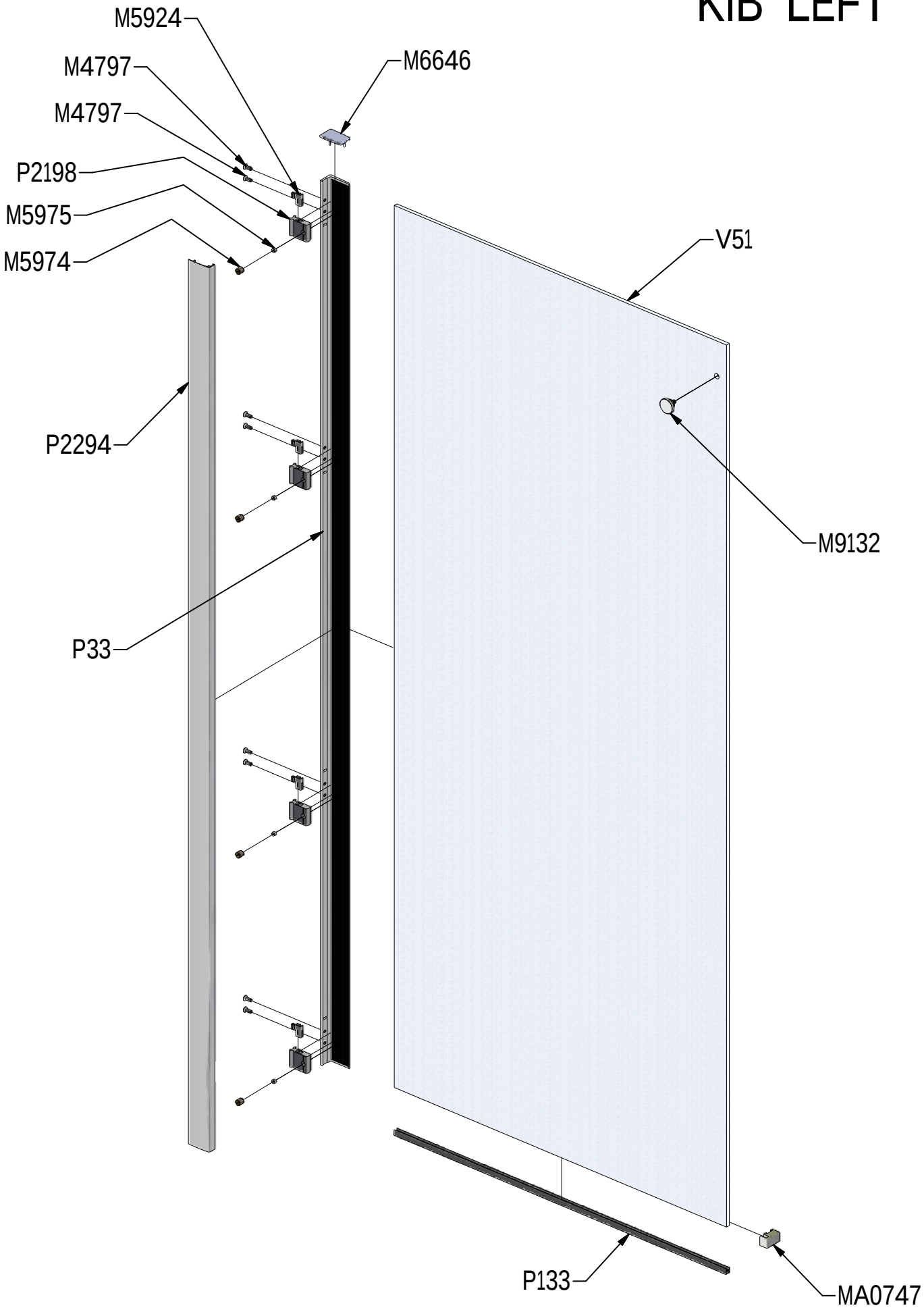
M5924
M4797
M4797
P2198
M5975
M5974
M6646
V51
P2294
M9132
P33
P133
MA0747

KIB RIGHT

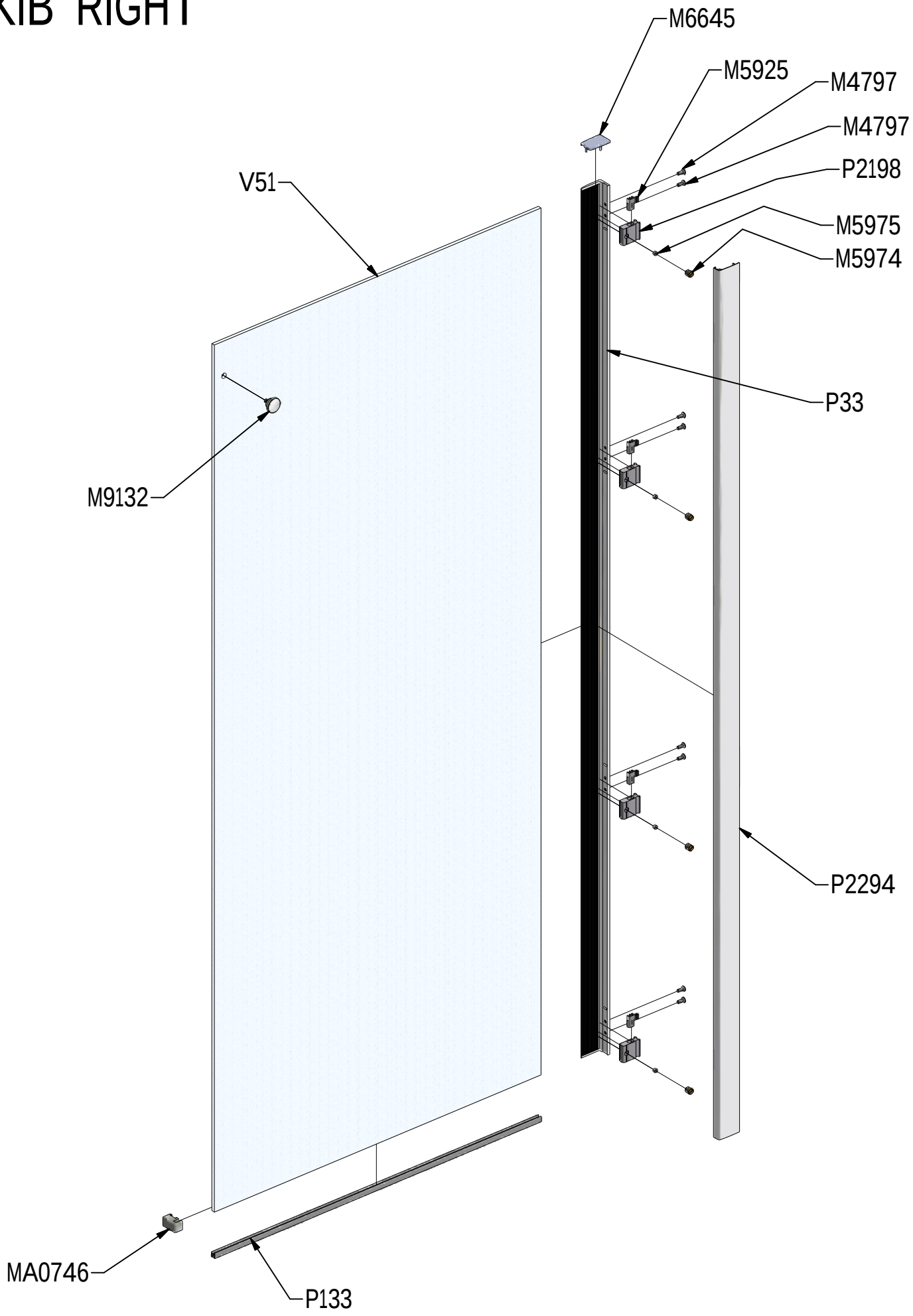
M6645
M5925
M4797
M4797
P2198
M5975
M5974
V51
P33
M9132
P2294
MA0746
P133

P33			ND01-0973-00

P133	900		P2733
	1000		P2735

V51	900	clear glass	ND03-0401-00-02
	1000	clear glass	ND03-0402-00-02